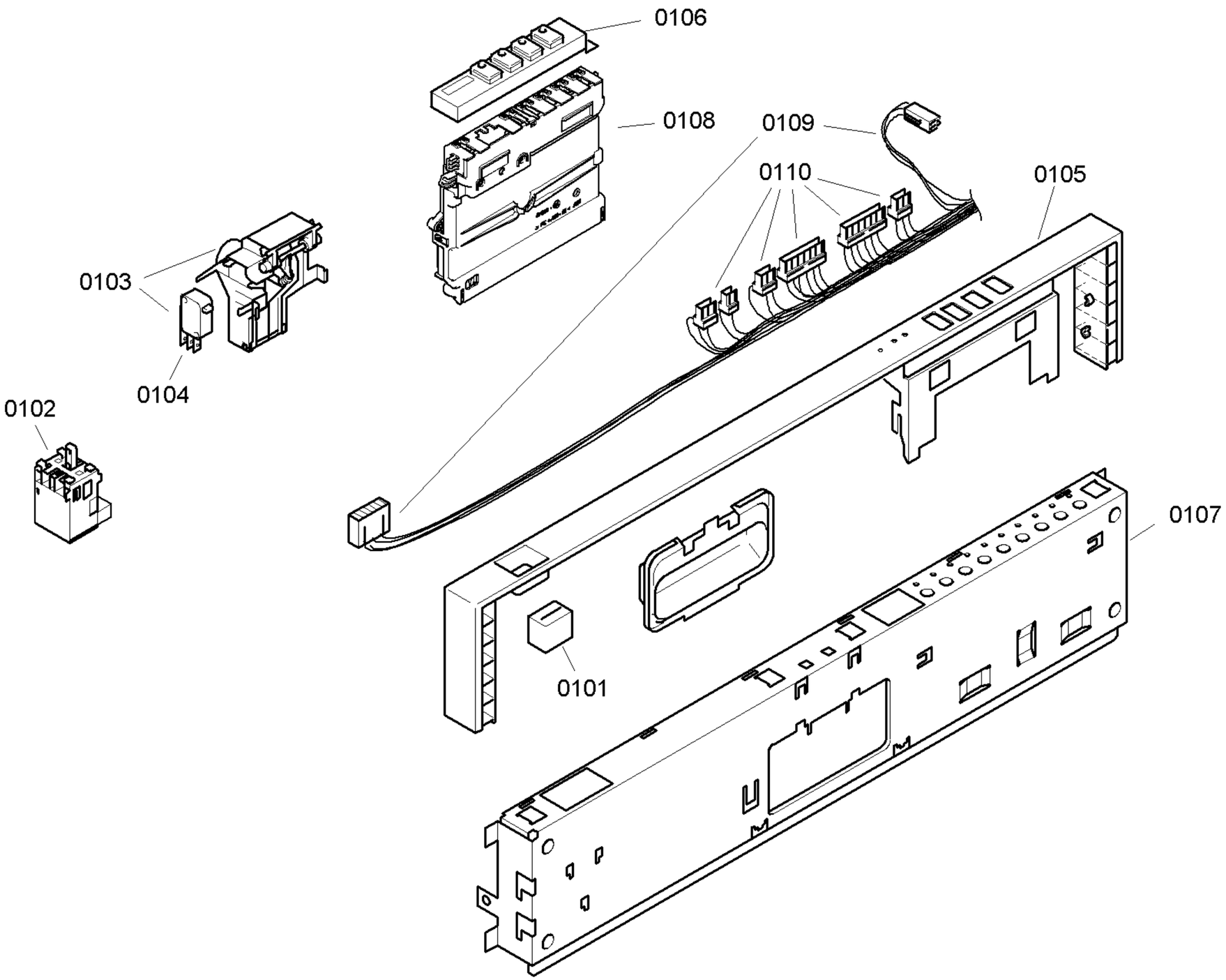

Copyright © (2009) by Siemens / ESHOP_7_2

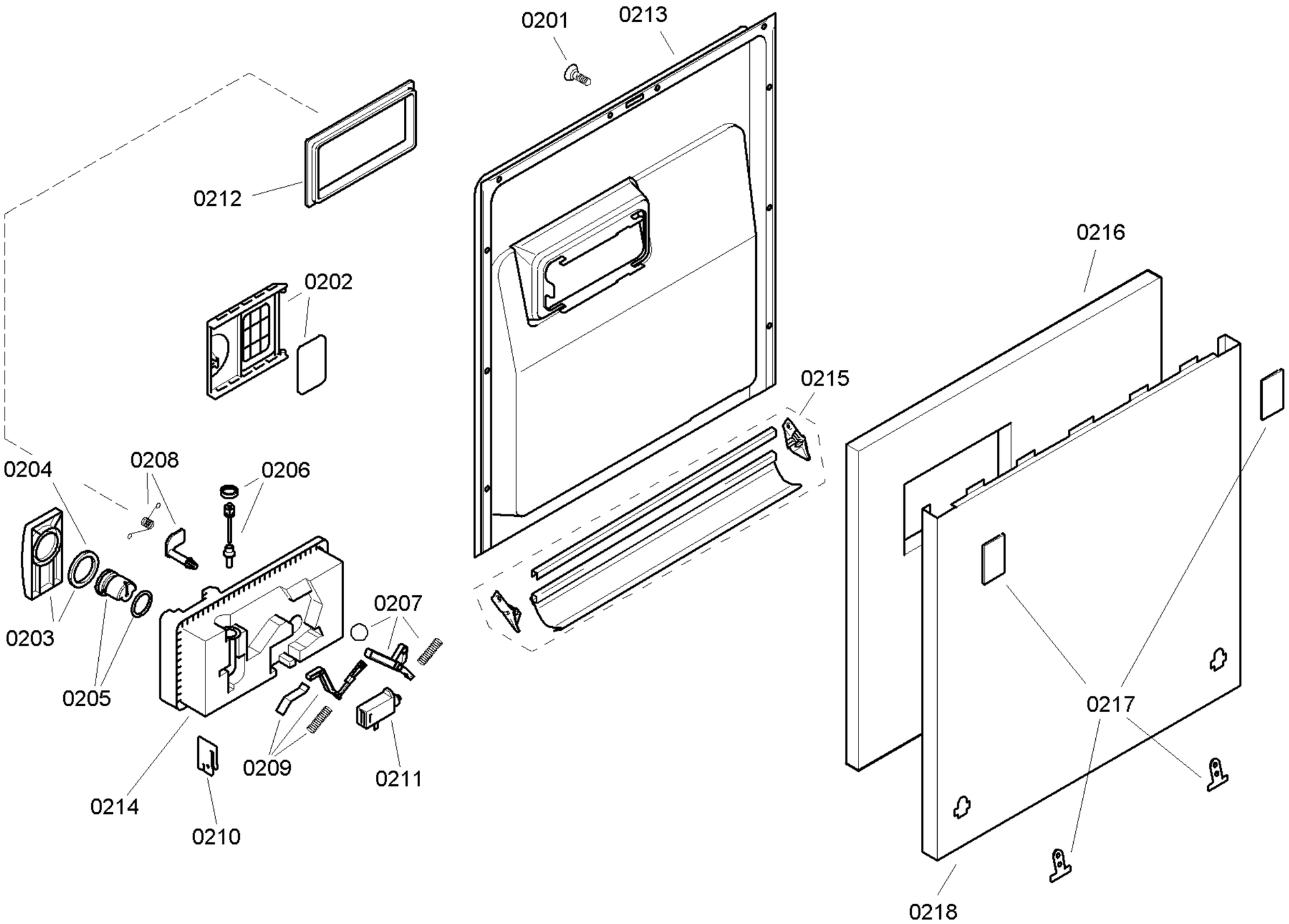

Copyright © (2009) by Siemens / ESHOP_7_2

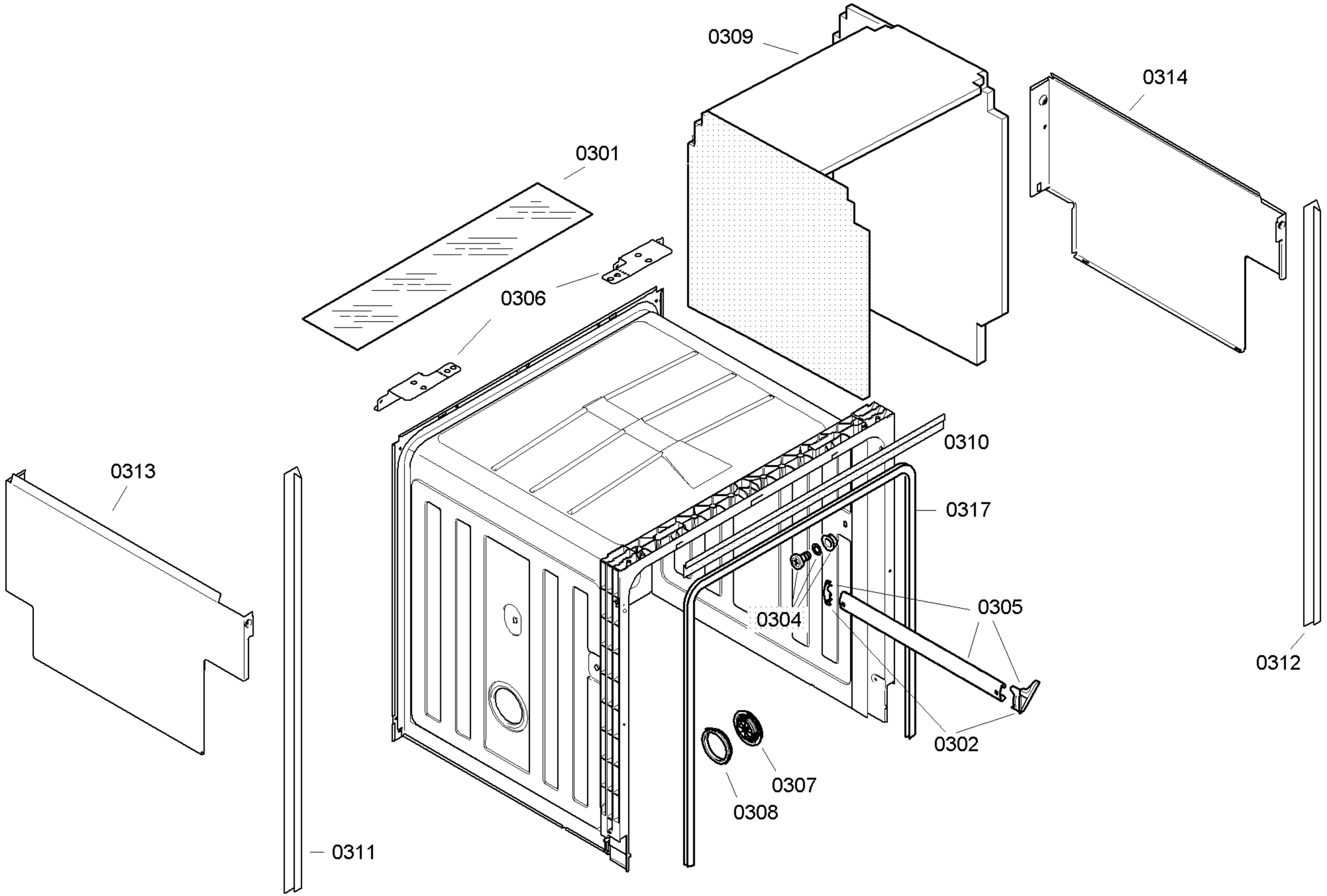

Copyright © (2009) by Siemens / ESHOP_7_2

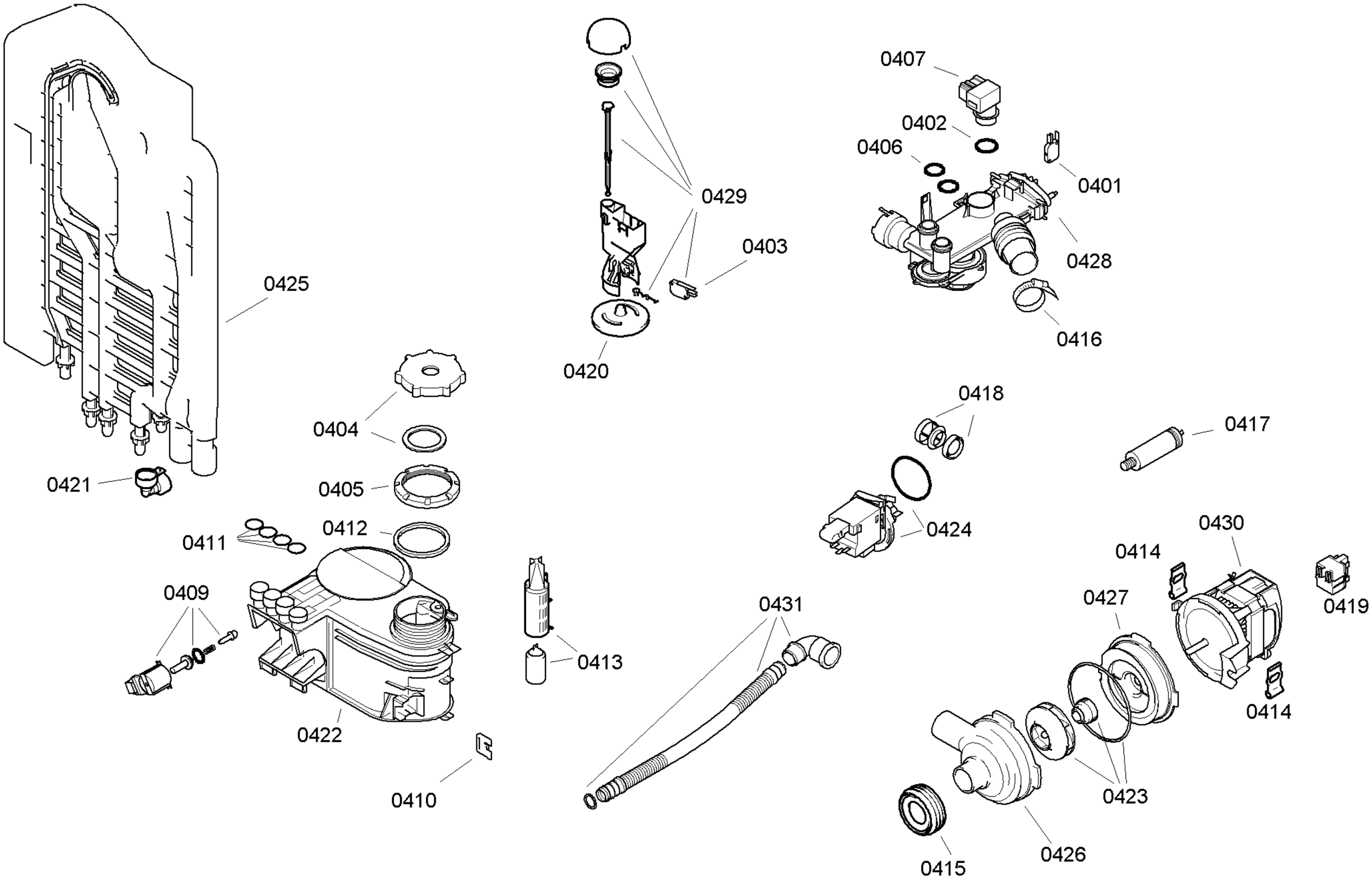

Copyright © (2009) by Siemens / ESHOP_7_2

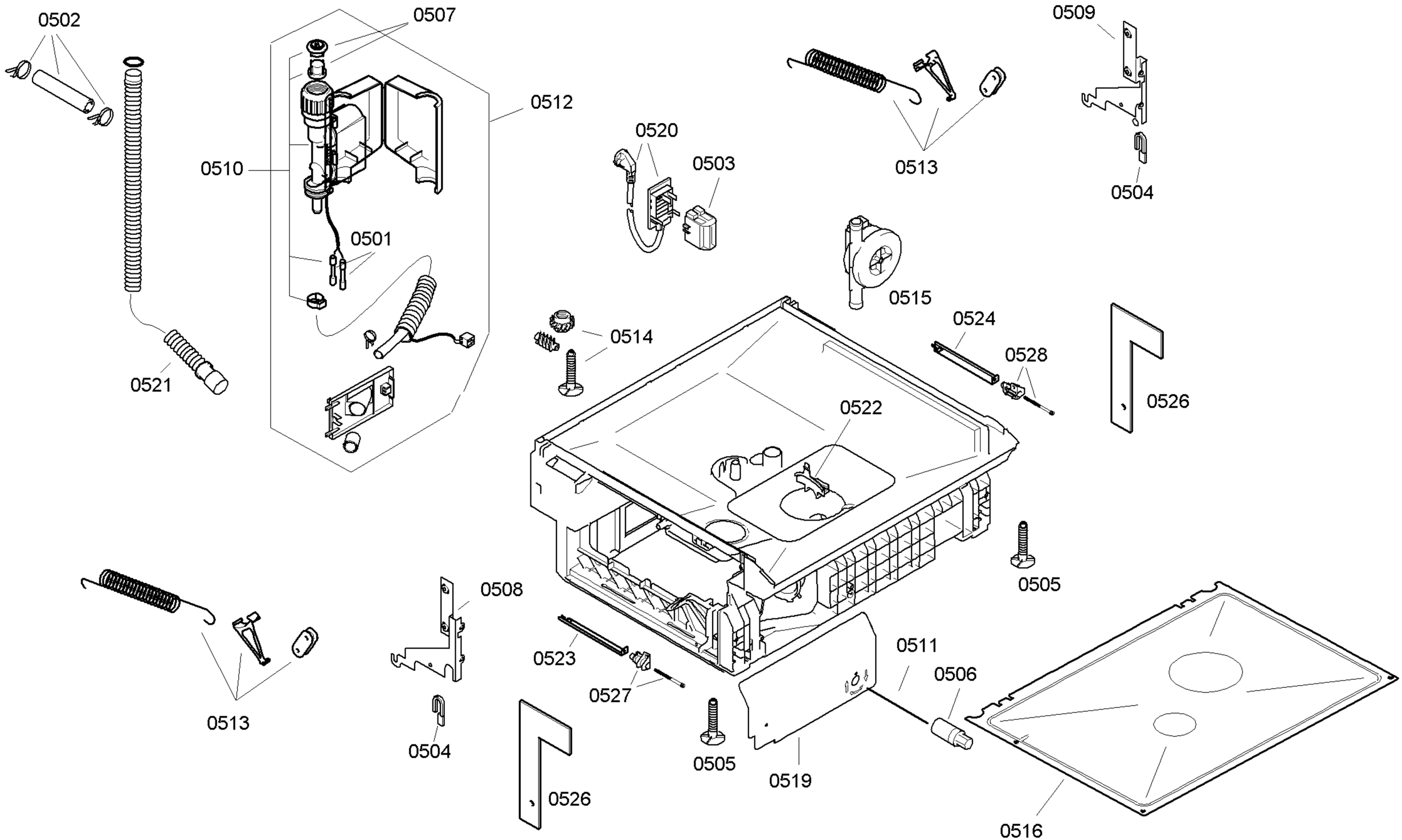

Copyright © (2009) by Siemens / ESHOP_7_2

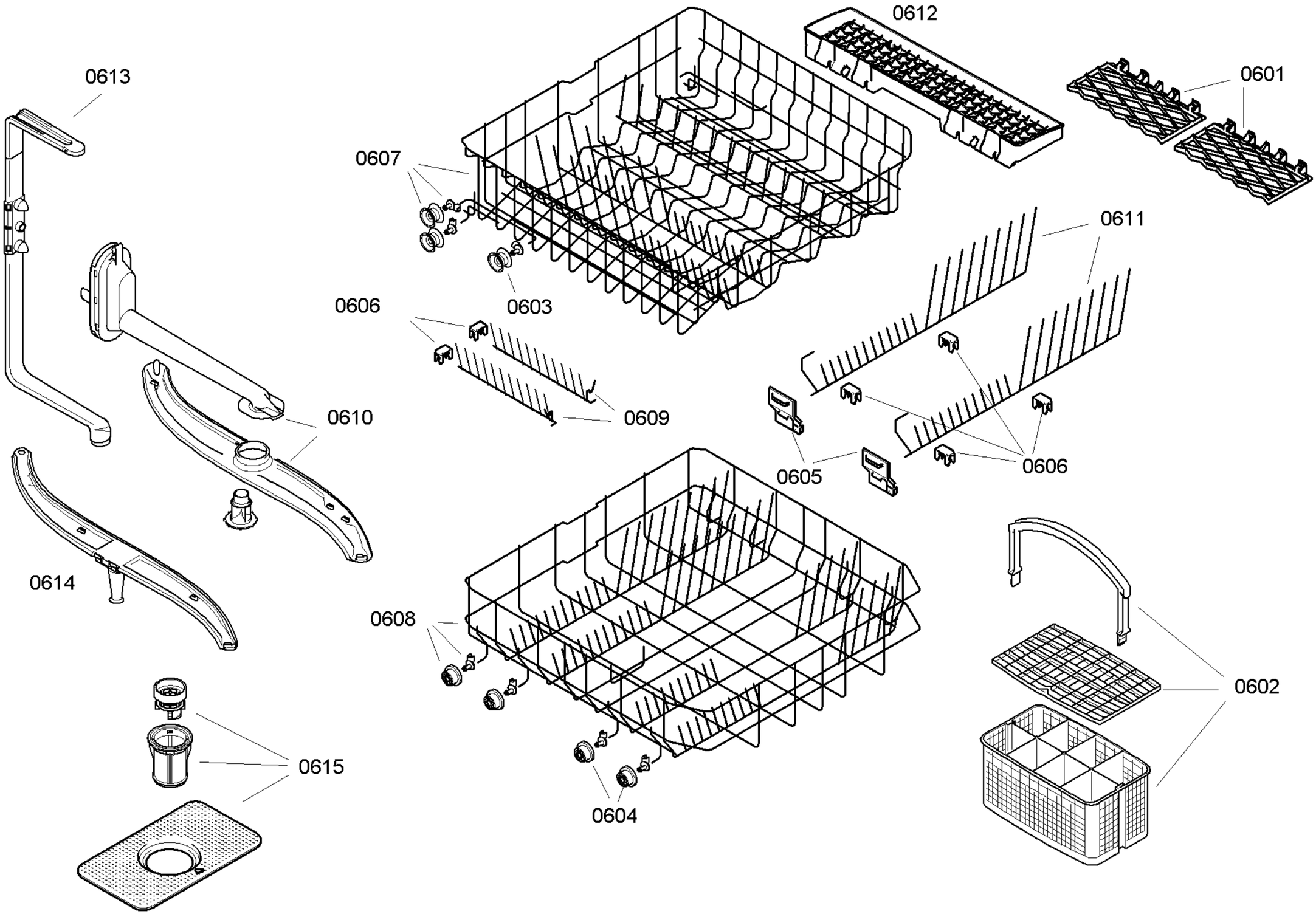

Copyright © (2009) by Siemens / ESHOP_7_2