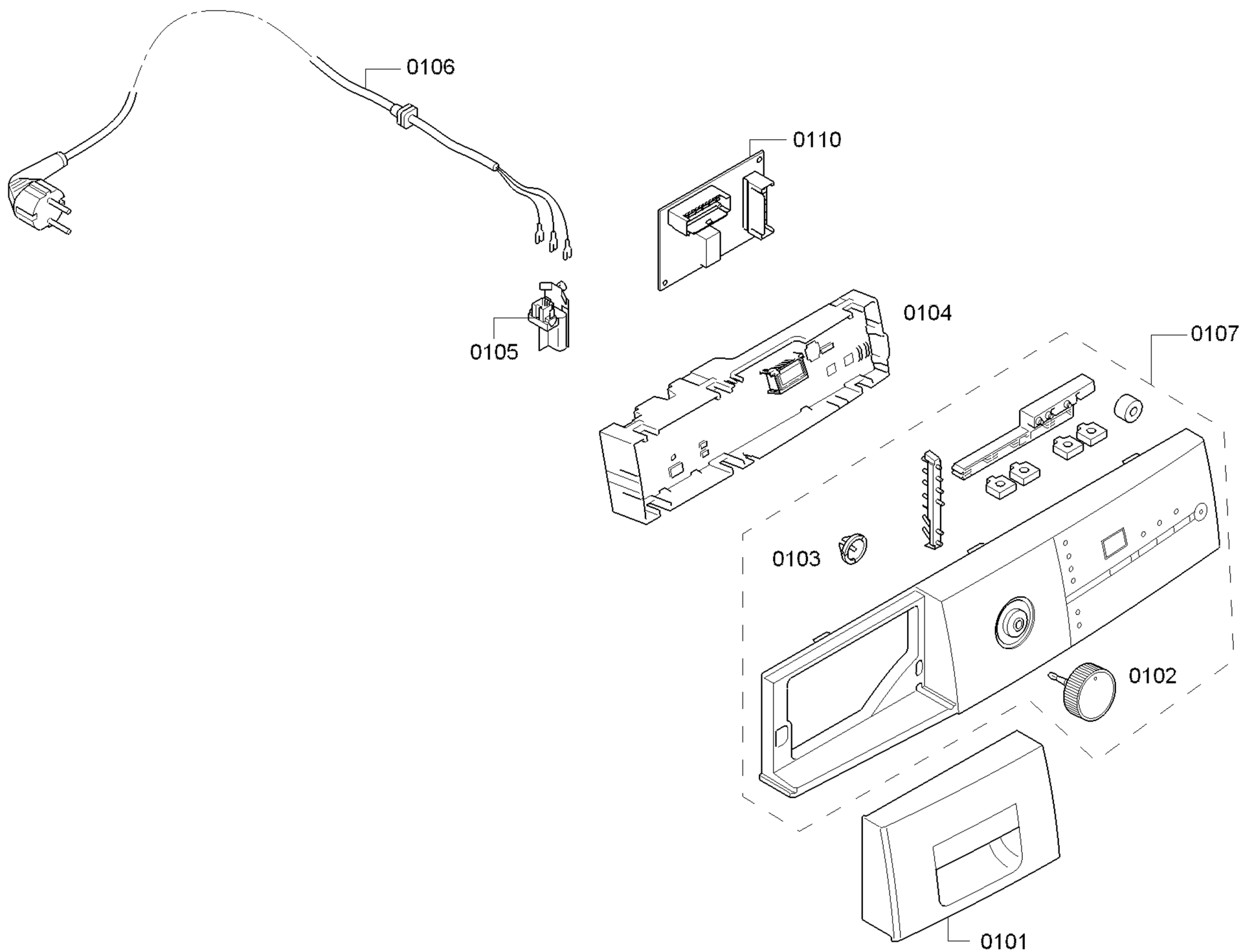

Copyright © (2014) by Siemens / ESHOP_12_6

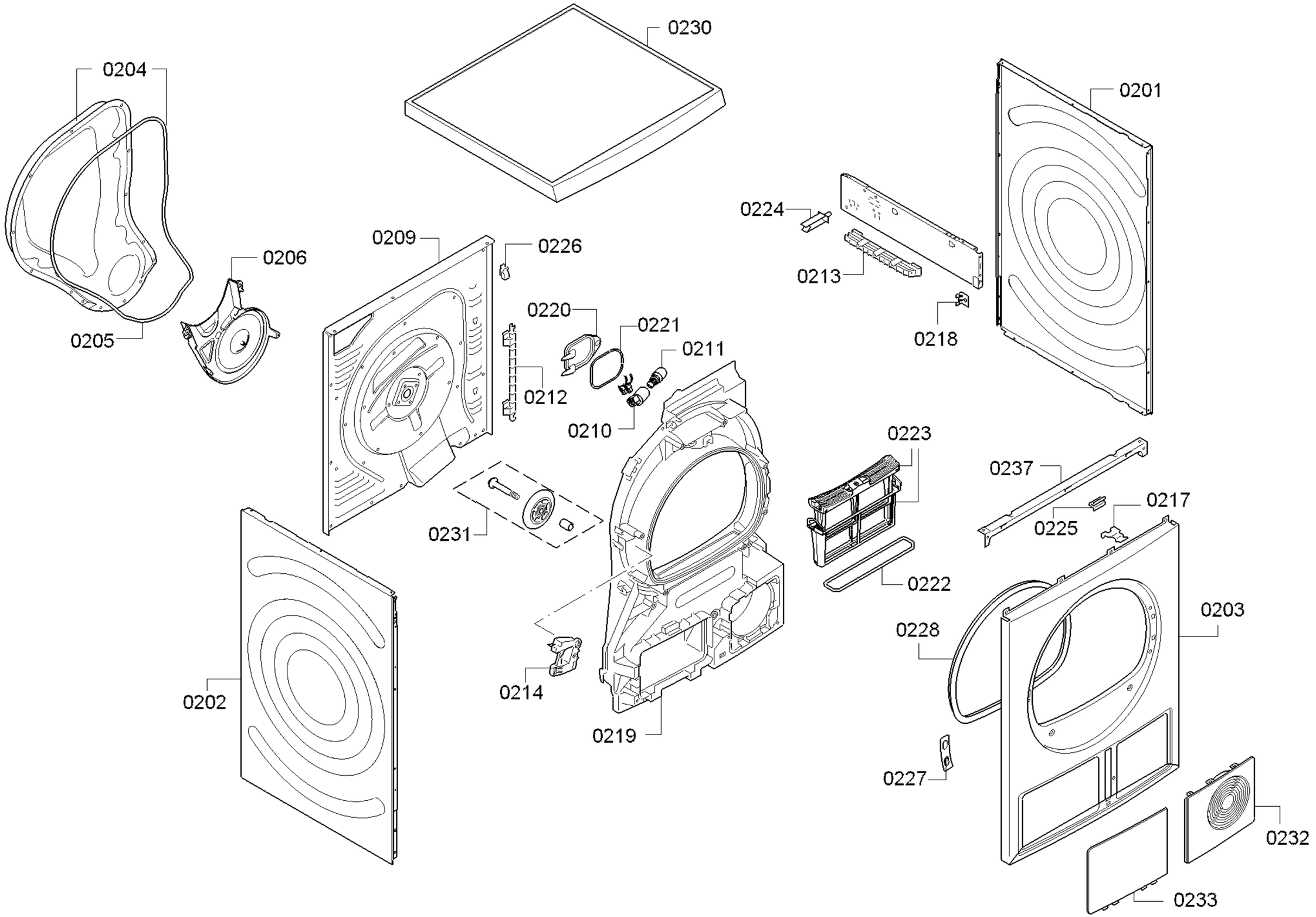

Copyright © (2014) by Siemens / ESHOP_12_6

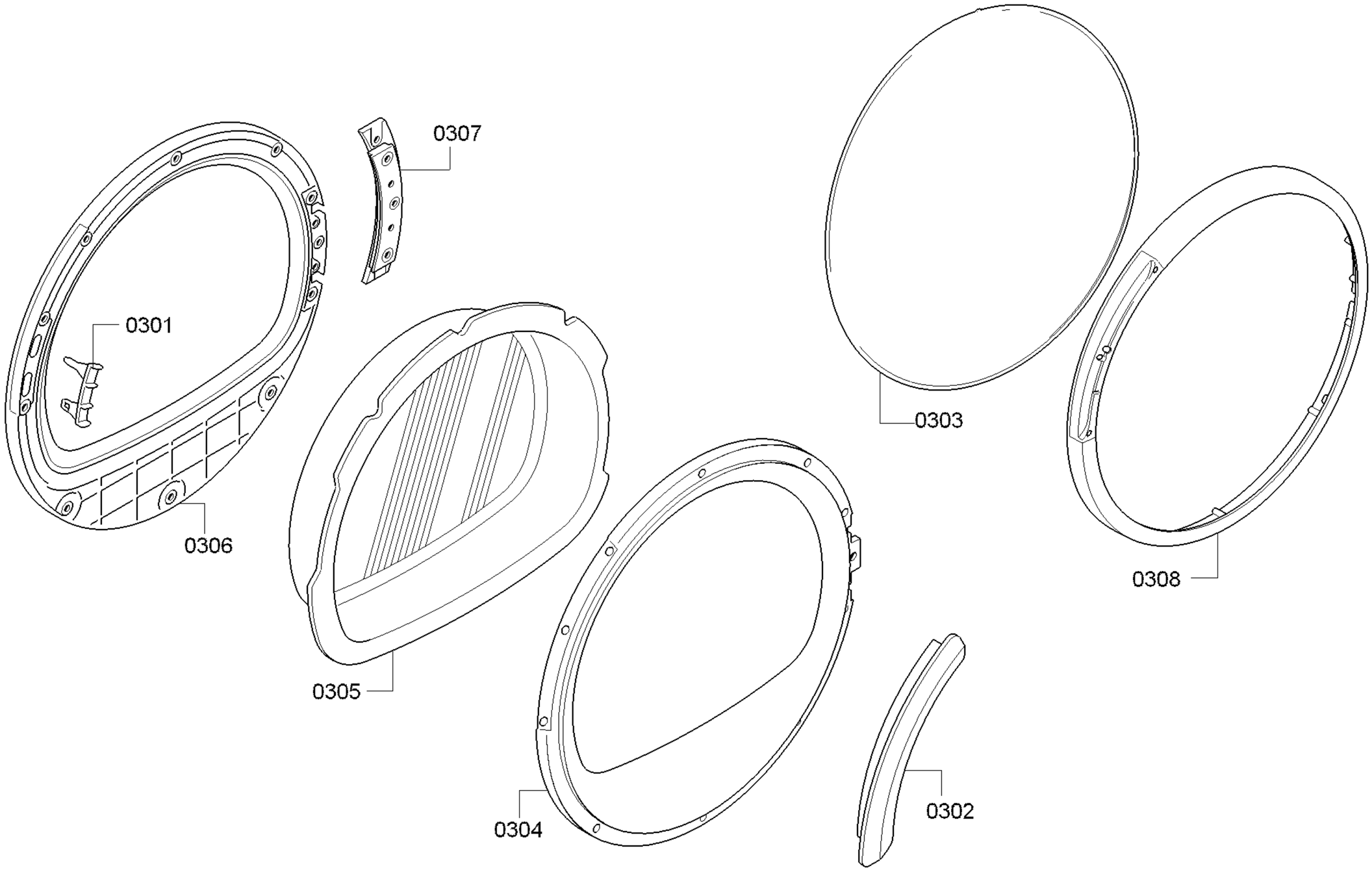

Copyright © (2014) by Siemens / ESHOP_12_6

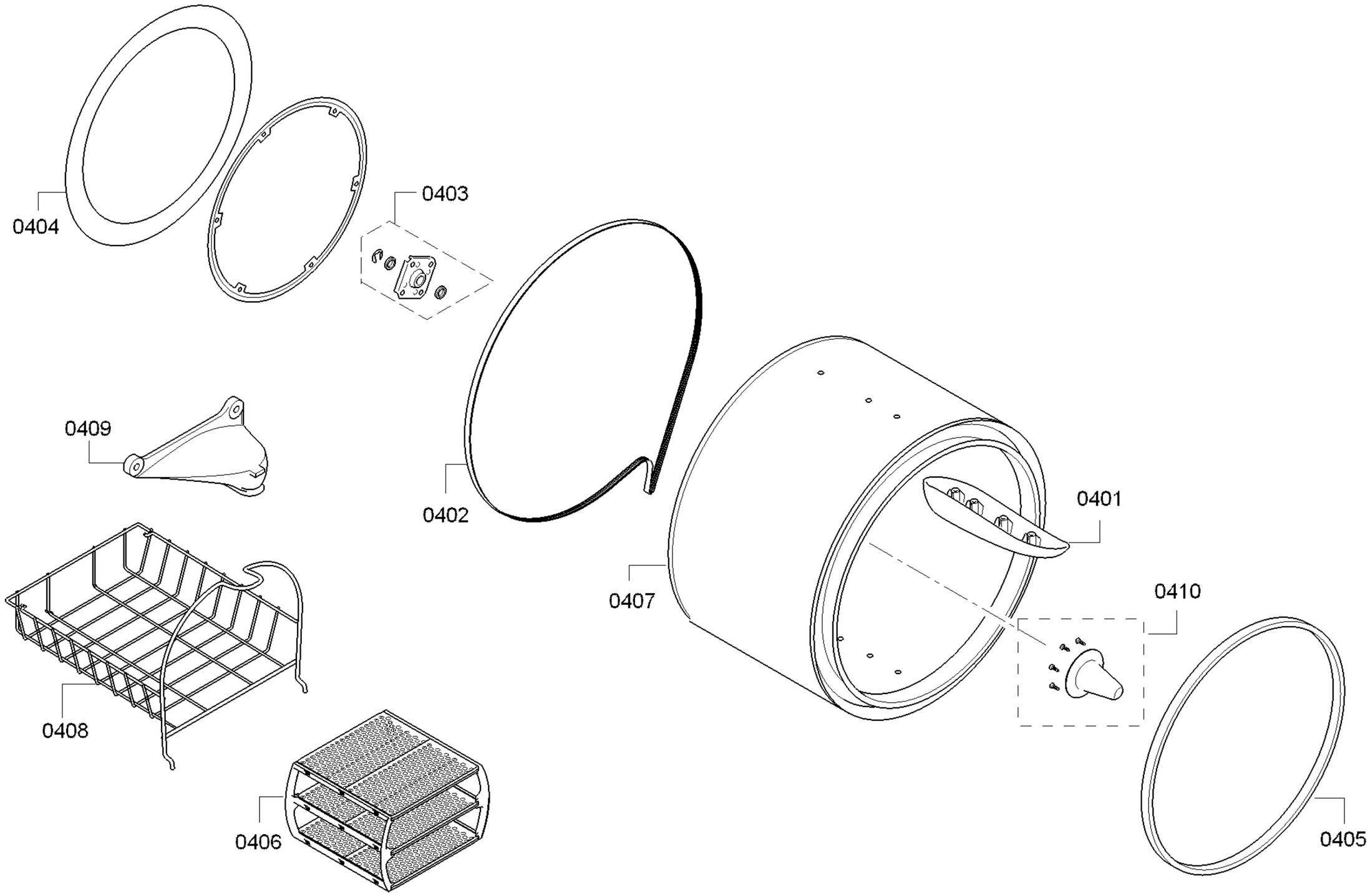

Copyright © (2014) by Siemens / ESHOP_12_6

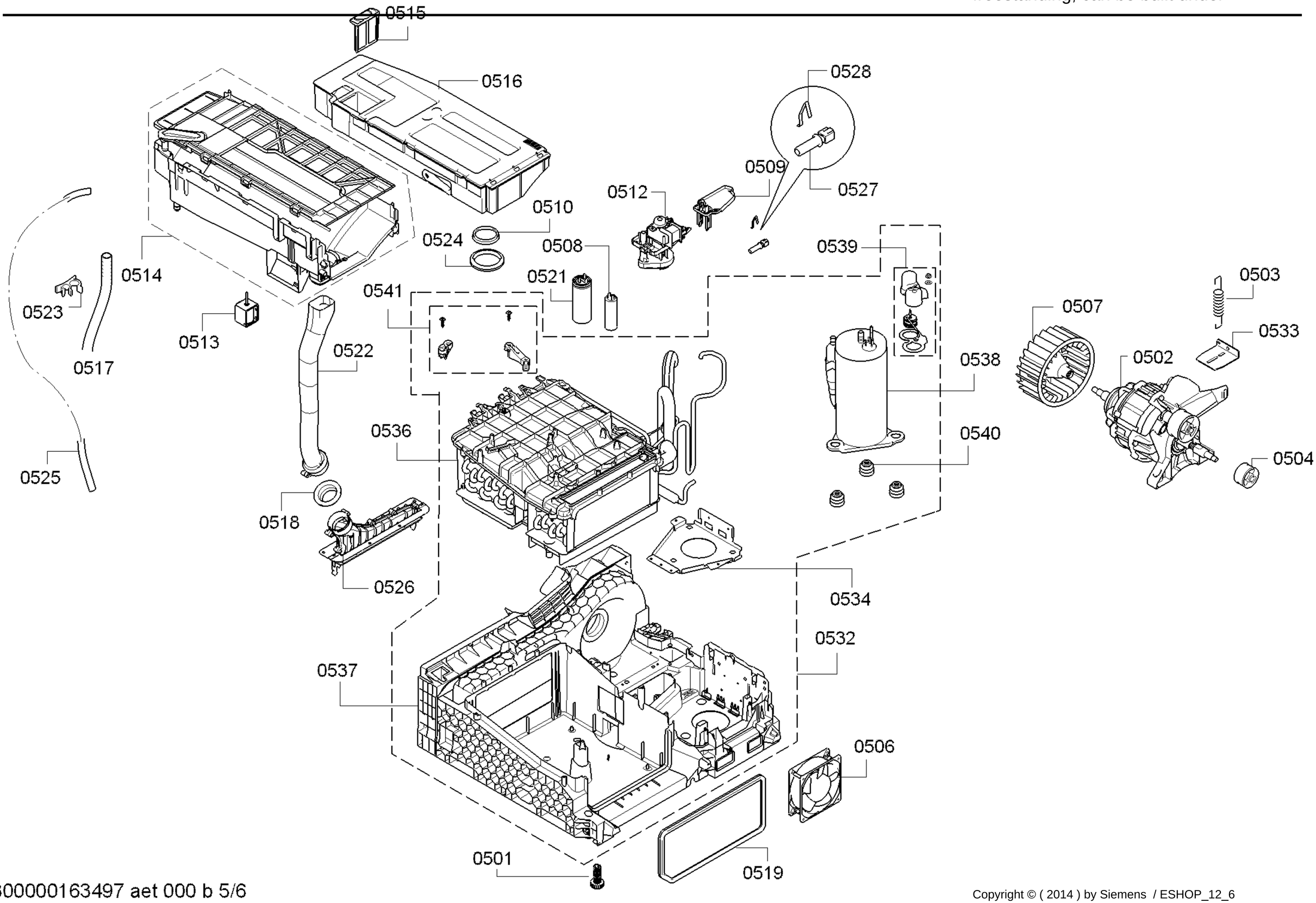

Copyright © (2014) by Siemens / ESHOP_12_6

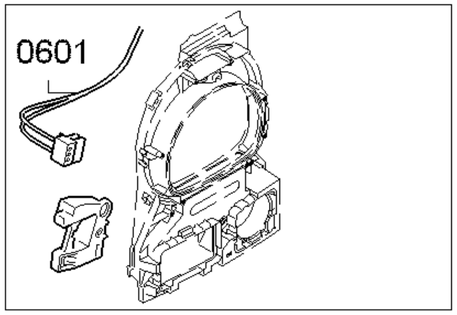

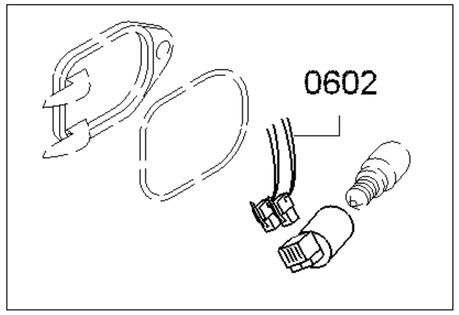

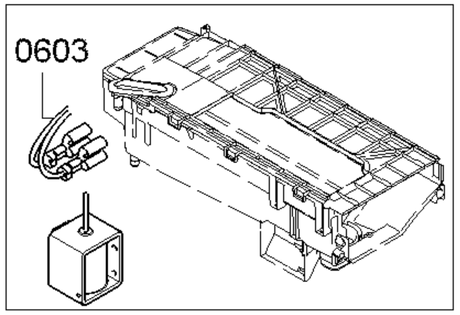

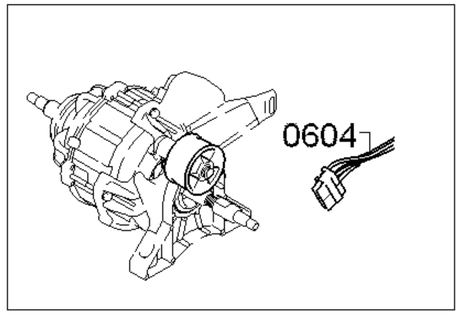

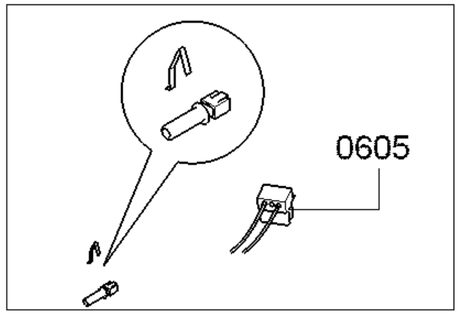

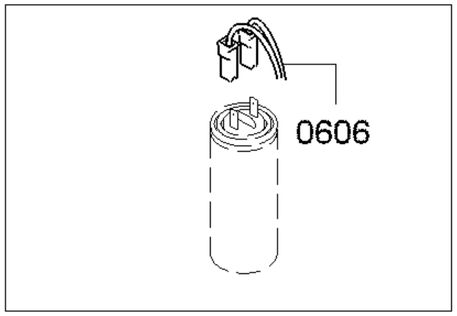

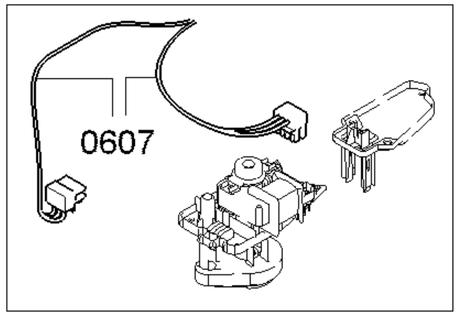

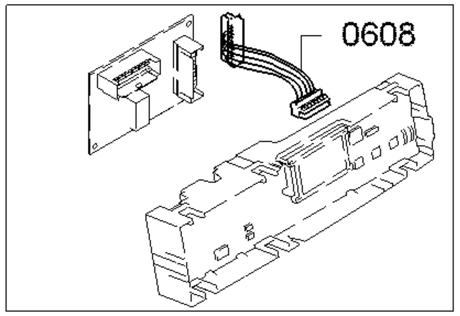

Copyright © (2014) by Siemens / ESHOP_12_6