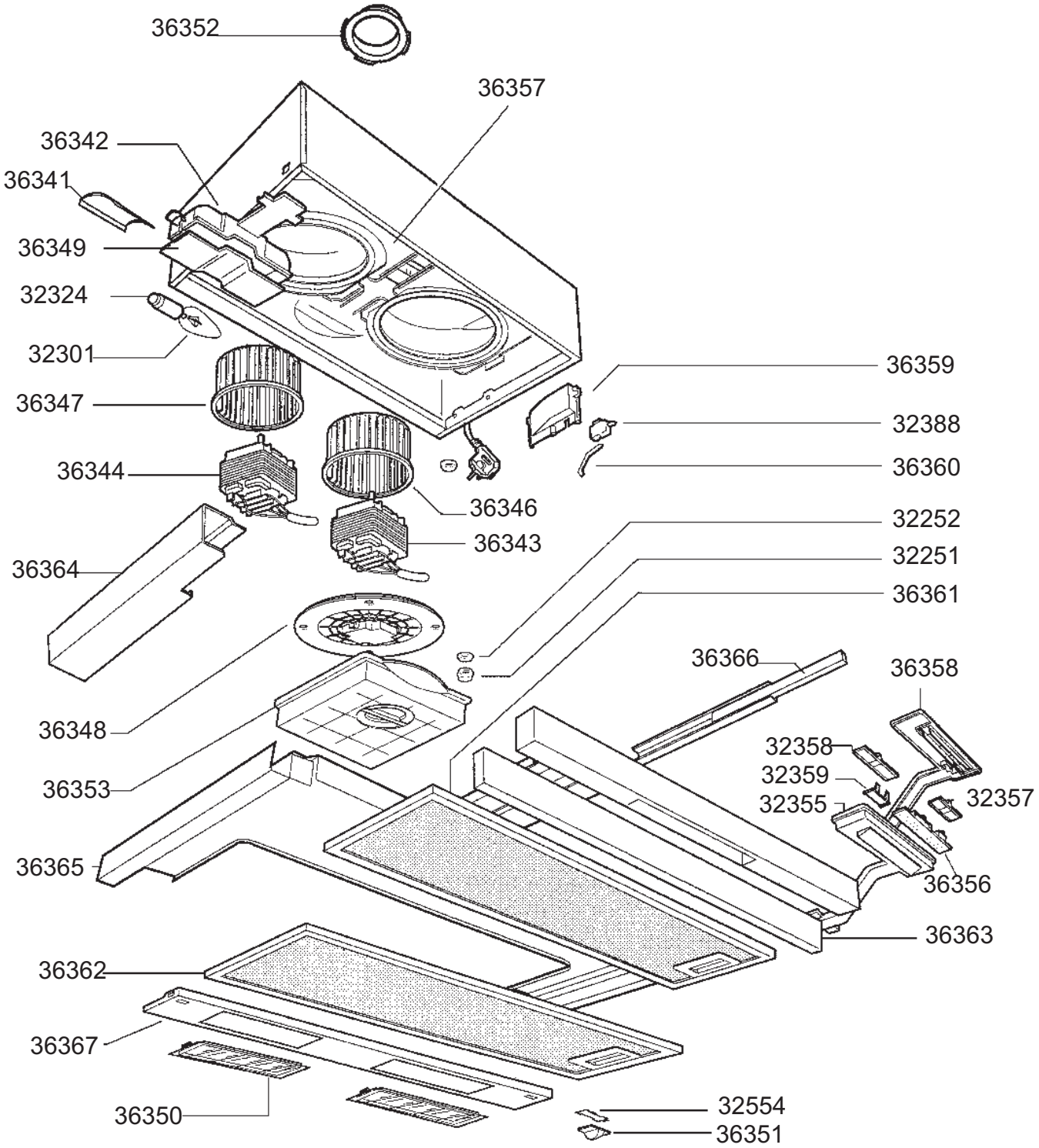
36352
36357
36342
36341
36349
32324
32301
36347
36344
36346
36343
36364
36348
36353
36365
36362
36367
36350
36359
32388
36360
32252
32251
36361
36366
36358
32358
32359
32355
32357
36356
36363
32554
36351

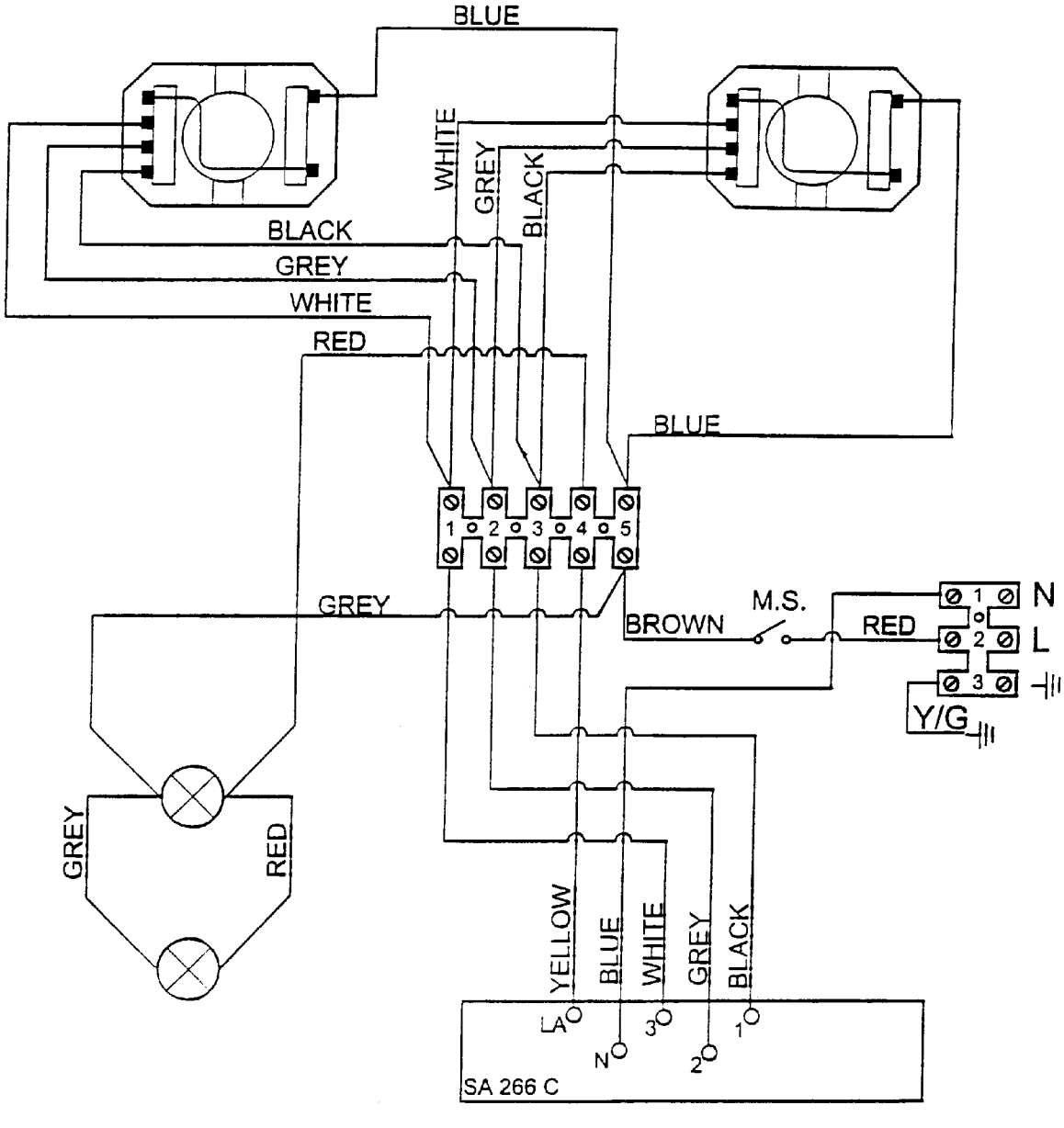
BLUE
WHITE
GREY
BLACK
BLACK
GREY
WHITE
RED
BLUE
1
2
3
4
5
GREY
M.S.
BROWN
RED
N
L
Y/G
GREY
RED
YELLOW
BLUE
WHITE
GREY
BLACK
L
A
N
3
2
1
SA 266 C