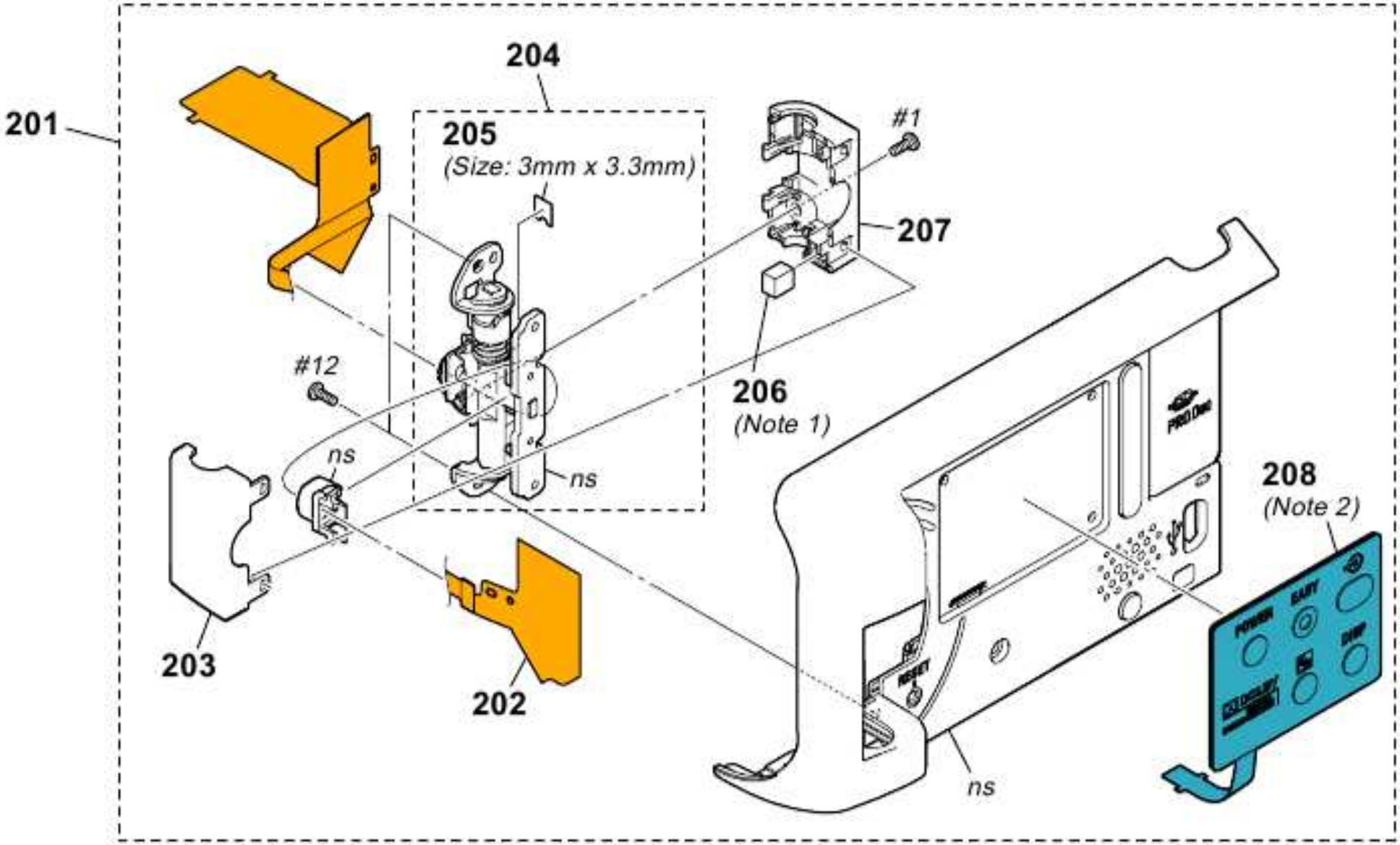
201
204
205
(Size: 3mm x 3.3mm)
#1
207
206
(Note 1)
#12
ns
ns
208
(Note 2)
203
202
ns
PRO DISC
POWER
BABY
DIM
RESET