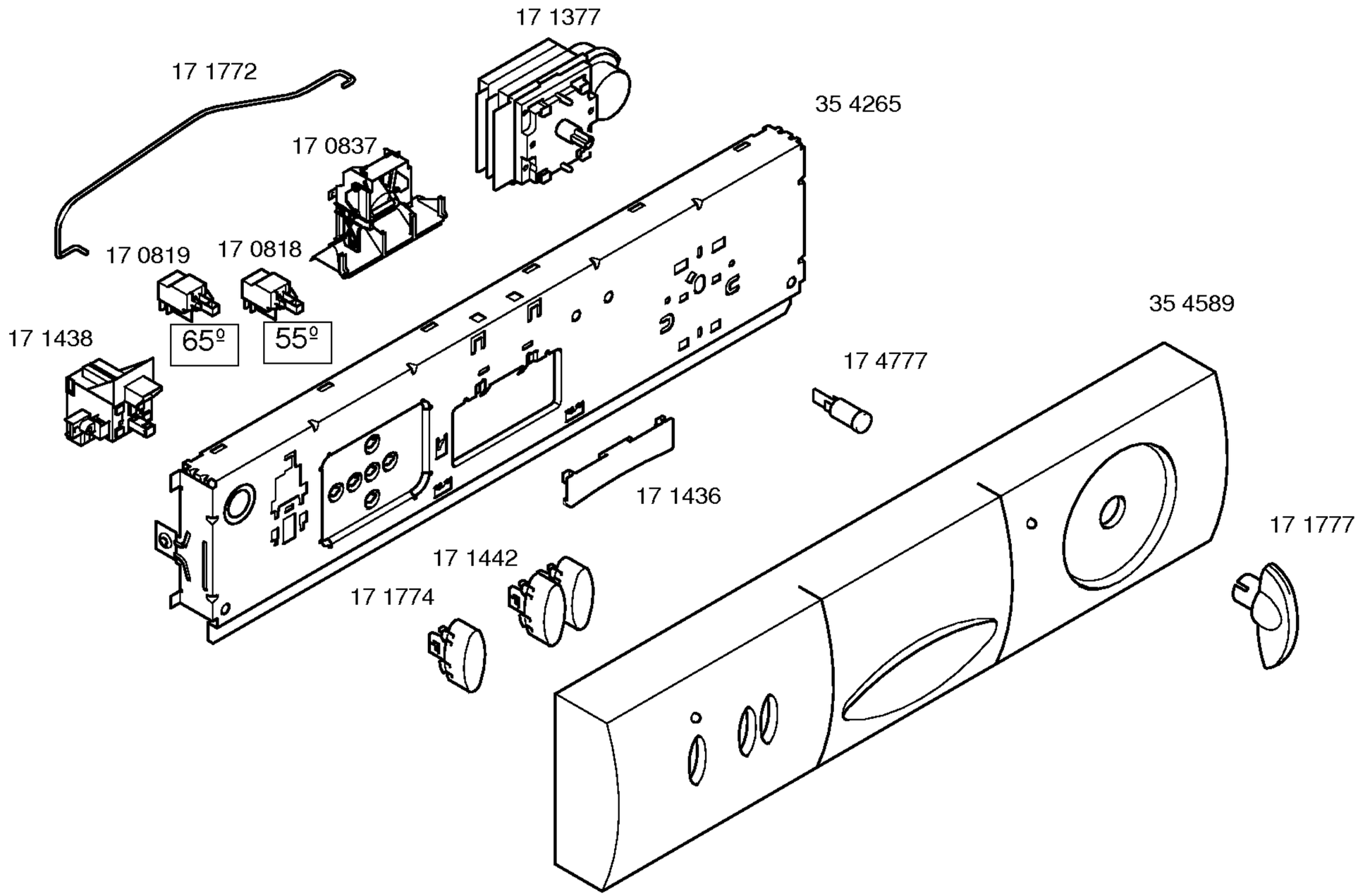

Libro de instrucciones
52 3349
(es,pt)

et60035 -6/1

Copyright © (2023) by Superser / 205502

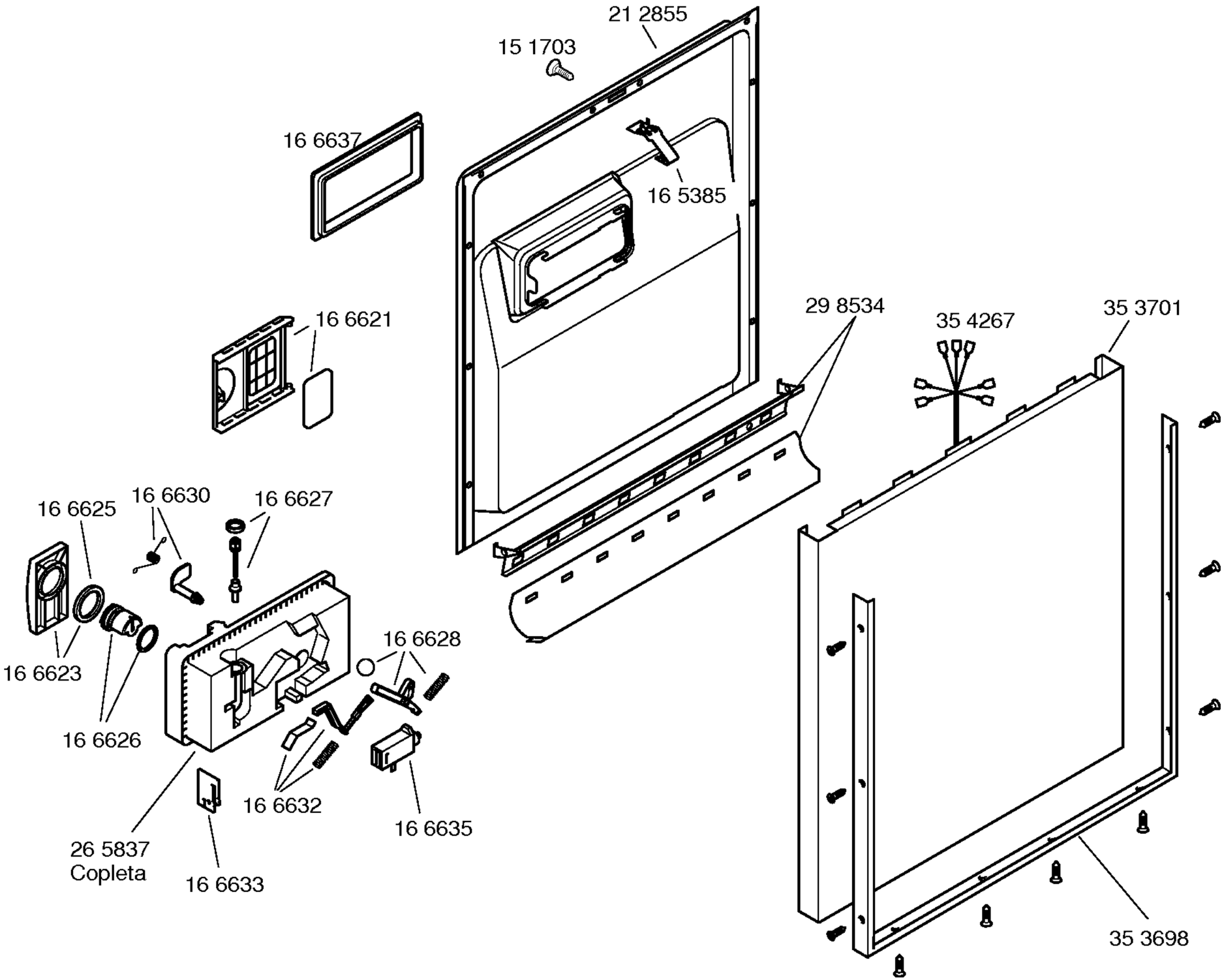

G 19

et60035 -6/2

Copyright © (2023) by Superser / 205502

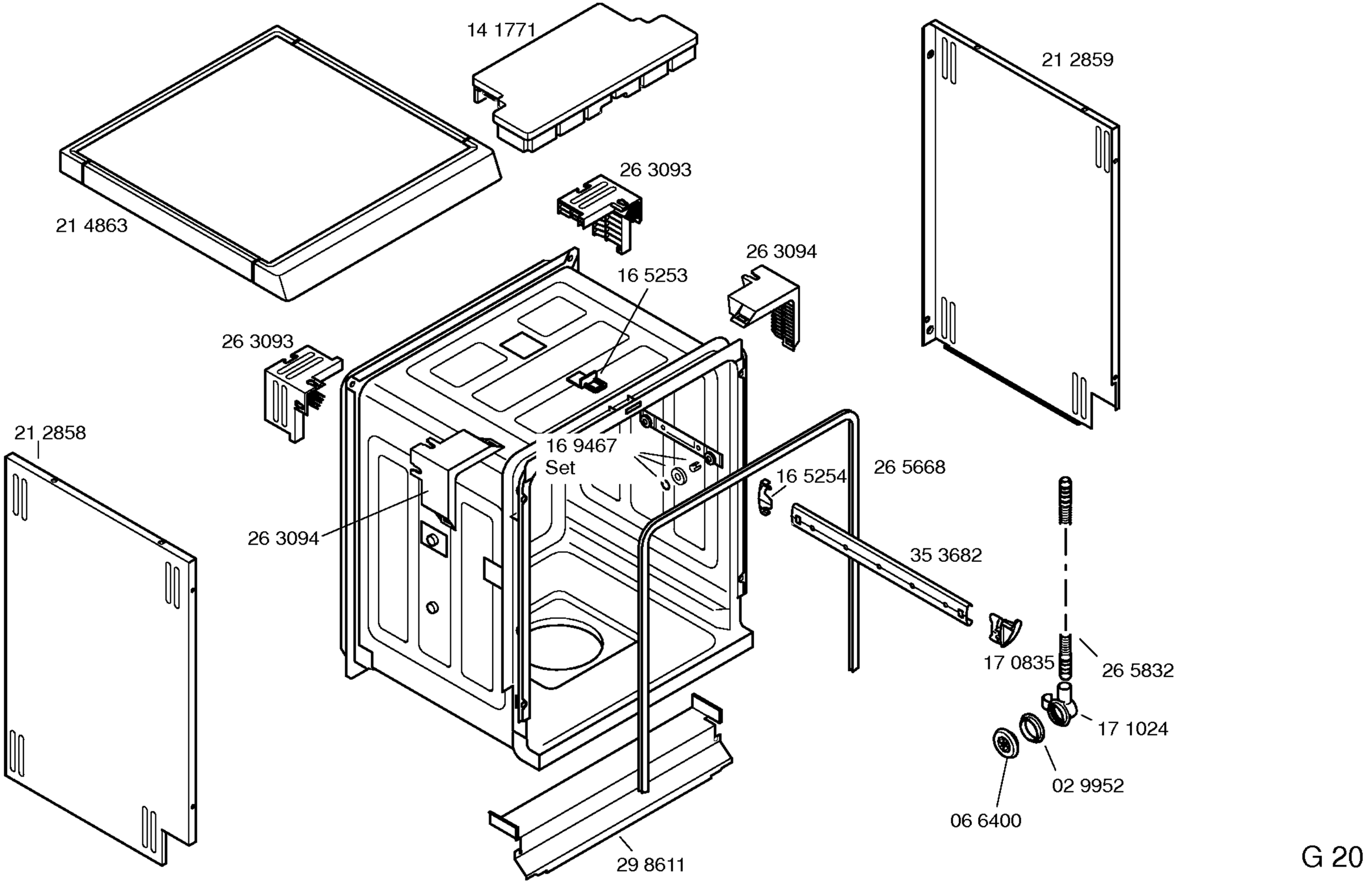

G 20

et60035 -6/3

Copyright © (2023) by Superser / 205502

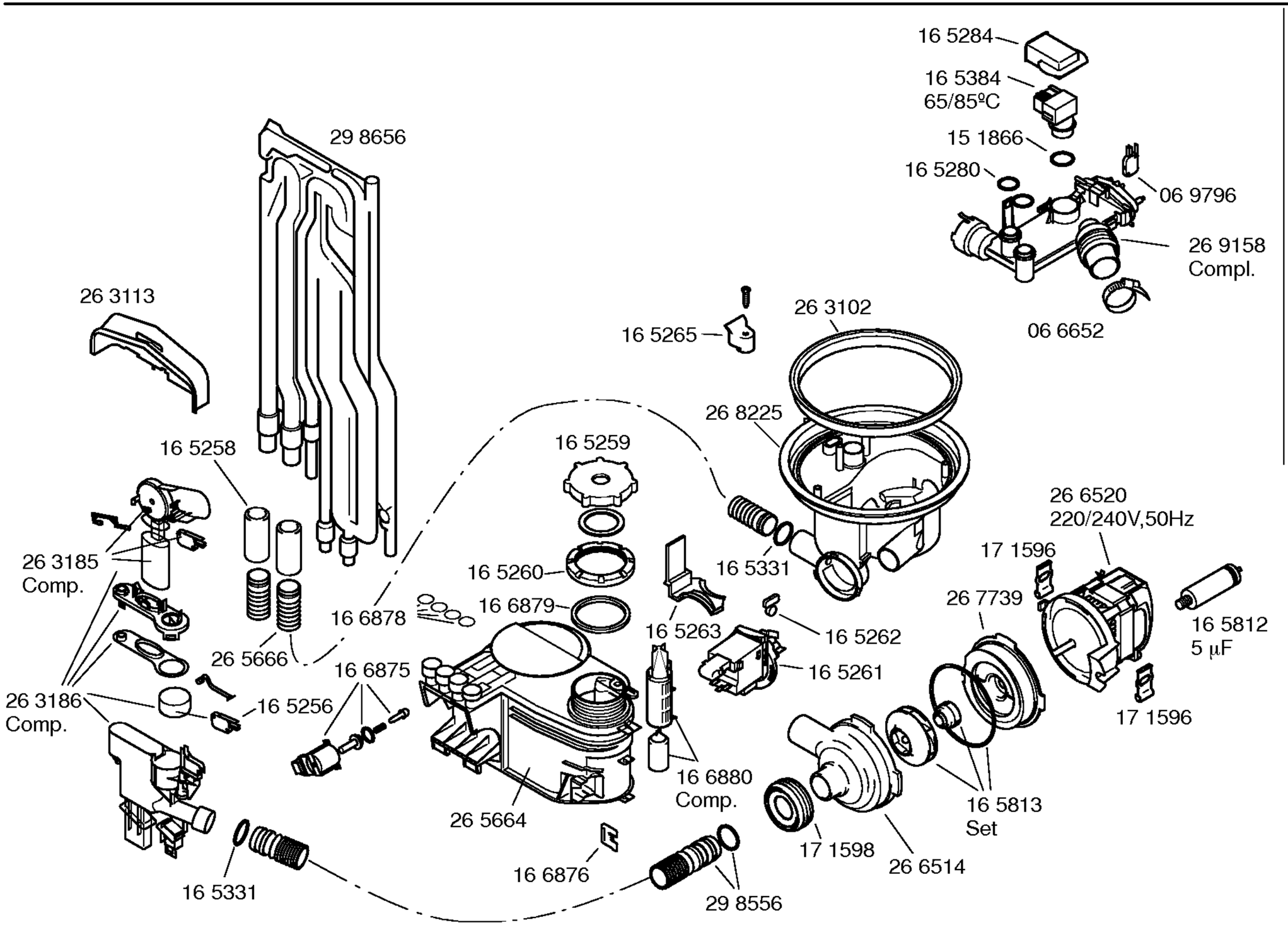

H 01

et60035 -6/4

Copyright © (2023) by Superser / 205502

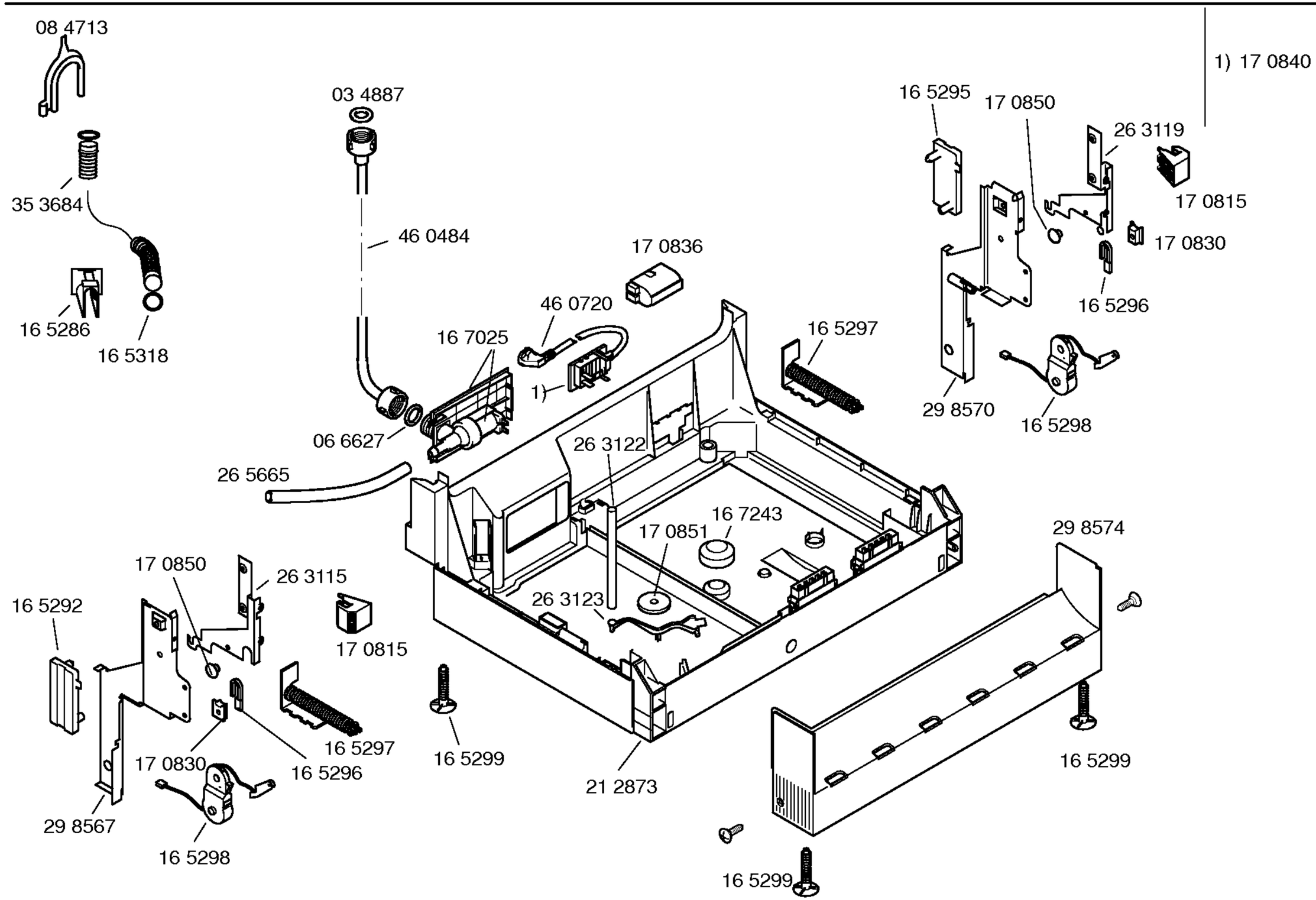

H 02

et60035 -6/5

Copyright © (2023) by Superser / 205502

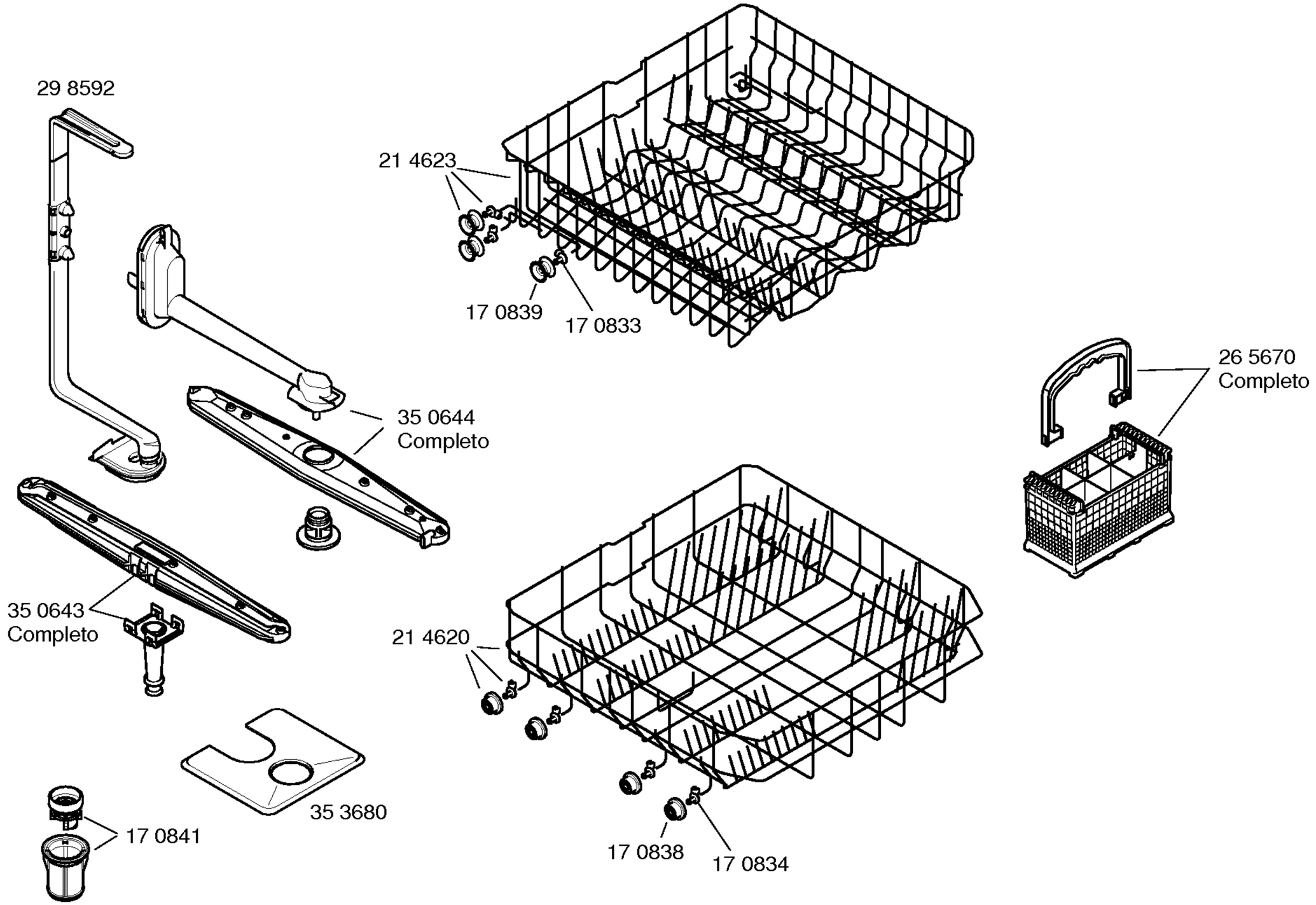

H 03

et60035 -6/6

Copyright © (2023) by Superser / 205502