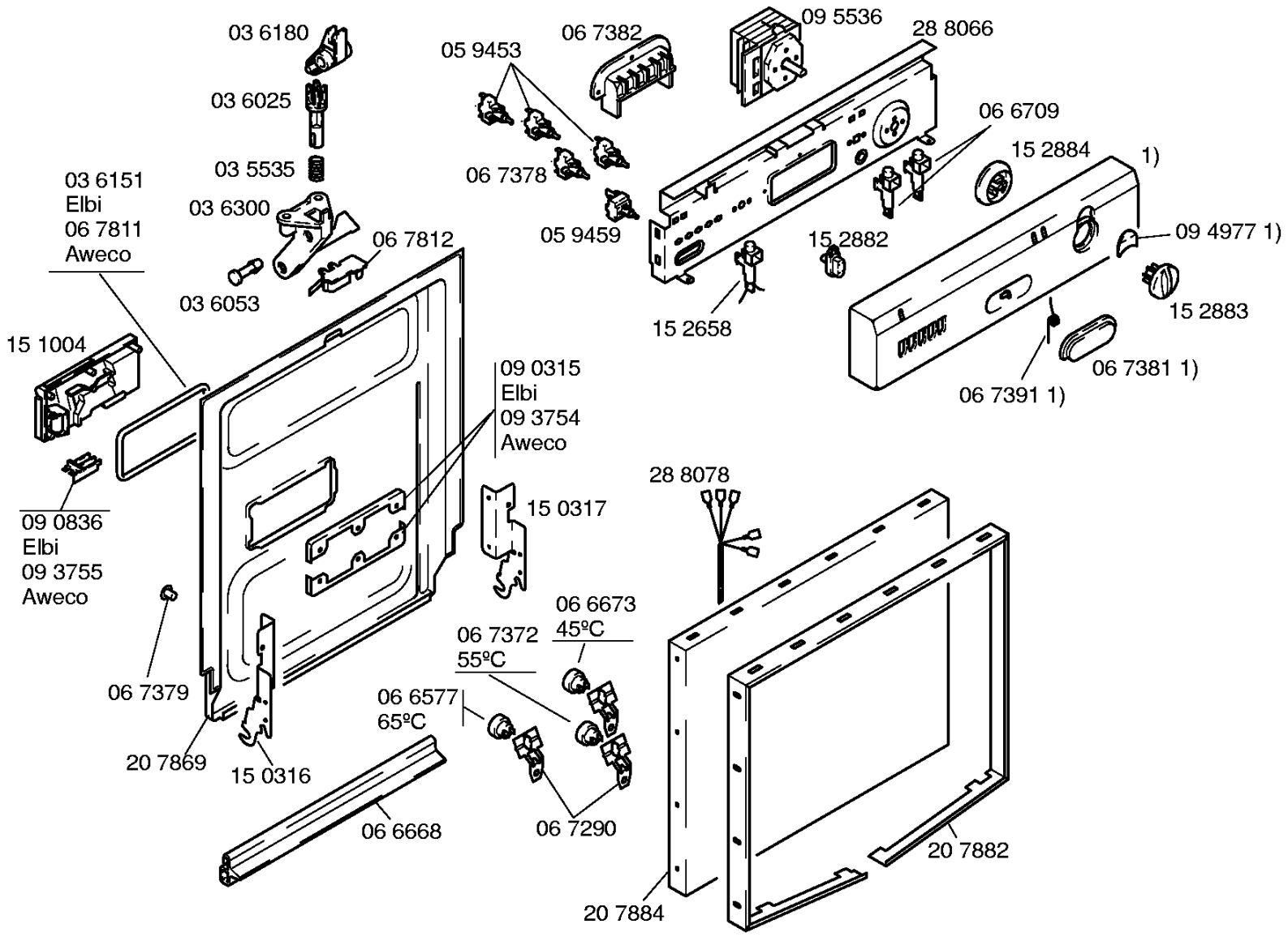


Libro de instrucciones
51 7590
(E)

1) 28 8384



Copyright © ( 2006 ) by SUPERSER

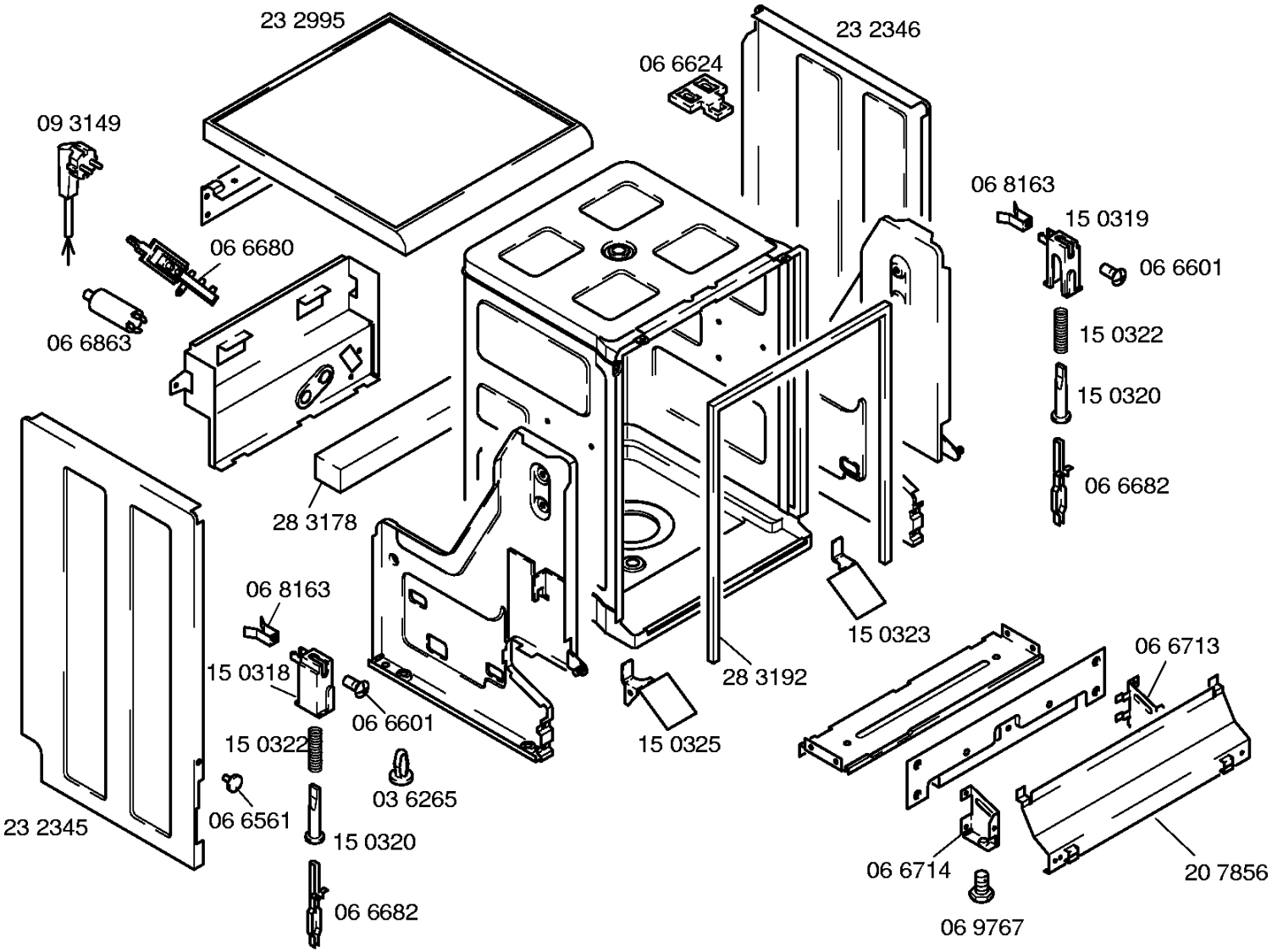




Copyright © ( 2006 ) by SUPERSER

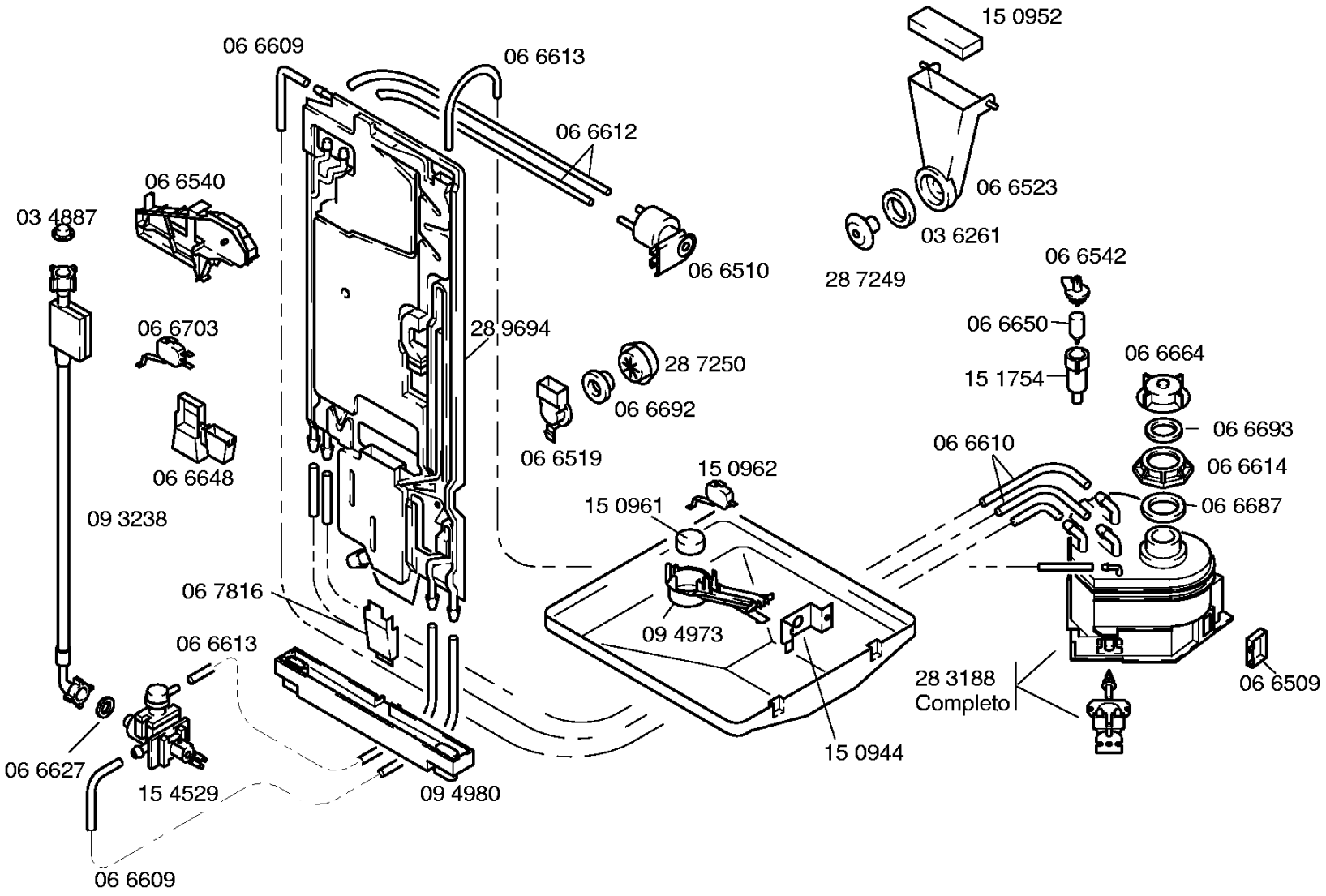




Copyright © ( 2006 ) by SUPERSER

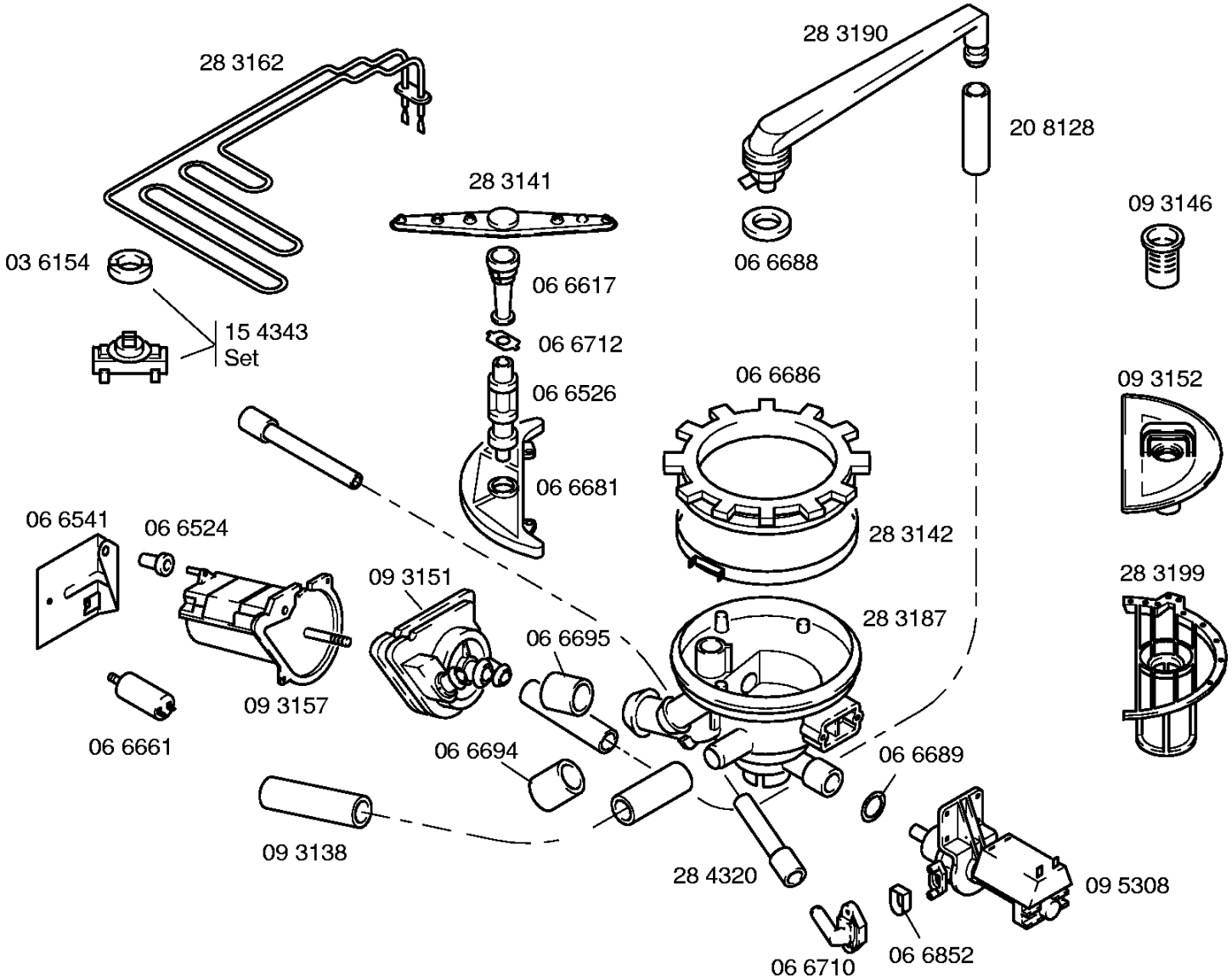




Copyright © ( 2006 ) by SUPERSER

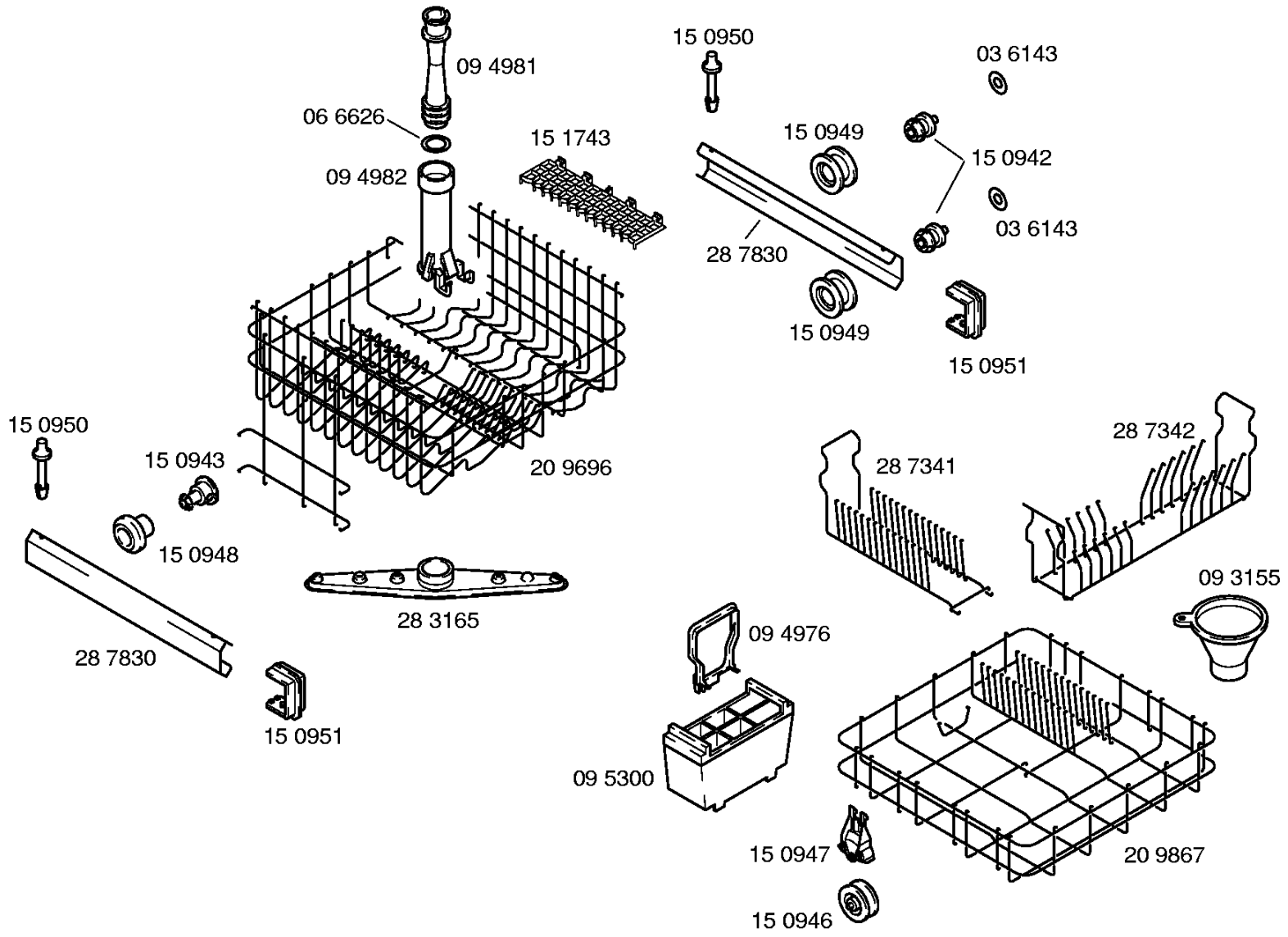




Copyright © ( 2006 ) by SUPERSER