■CABINET PARTS LOCATION

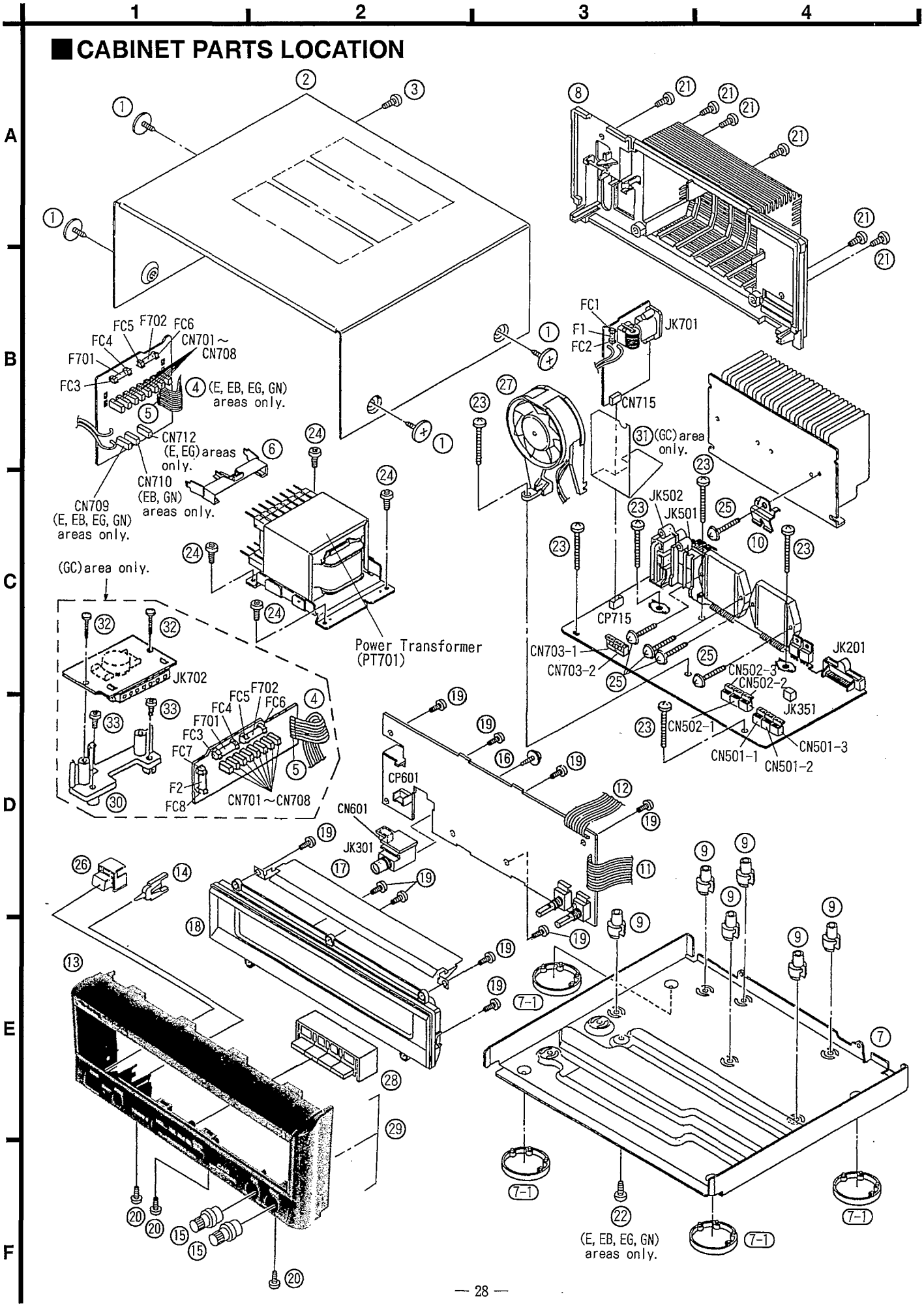
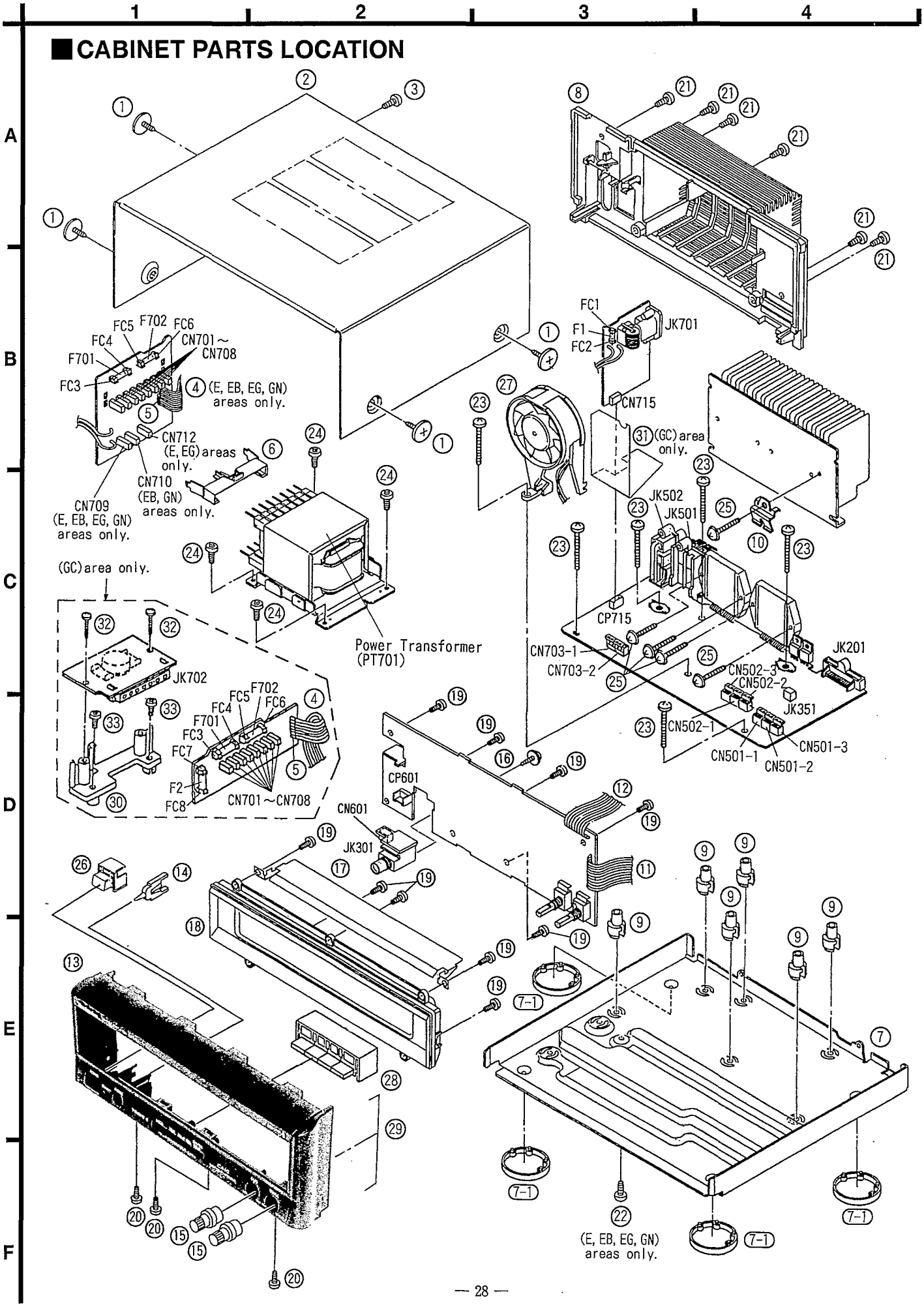
■CABINET PARTS LOCATION