May show more parts than really exists

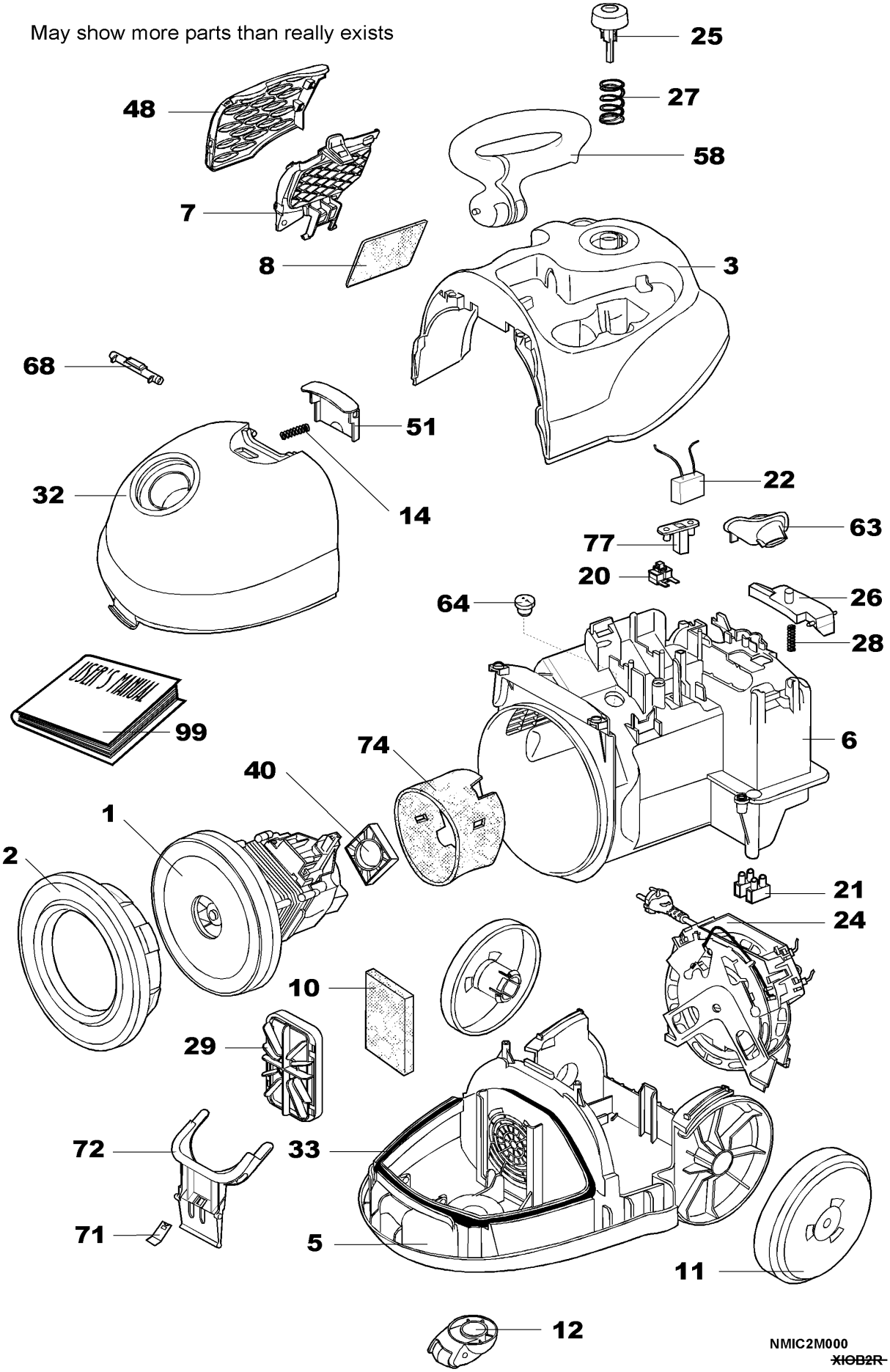

NMIC2M000
~~XIOB2R~~