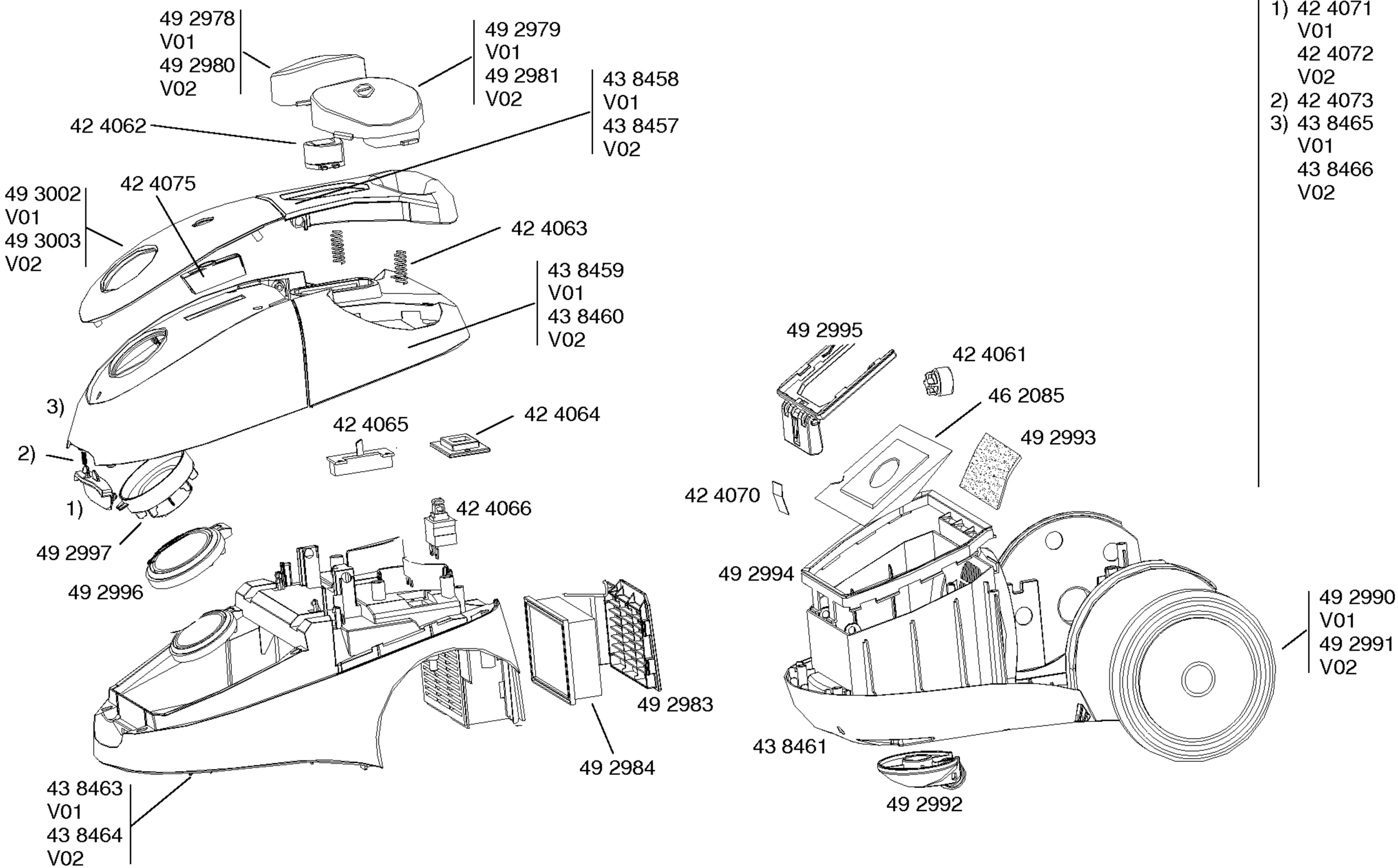

1) 42 4071
V01
42 4072
V02
2) 42 4073
3) 43 8465
V01
43 8466
V02

Copyright © (2012) by Ufesa / 205502

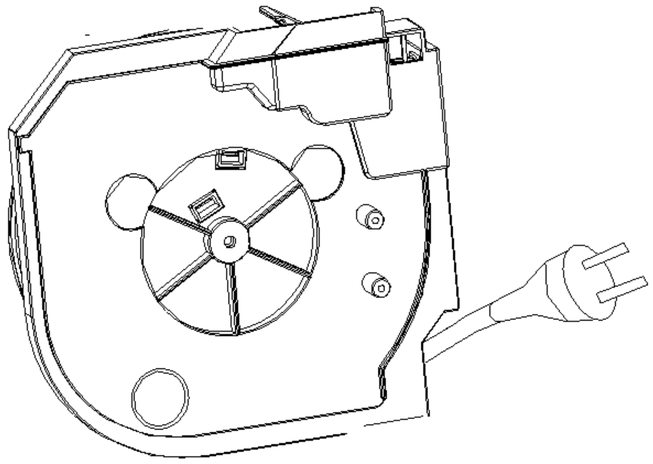

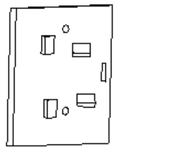

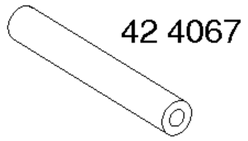

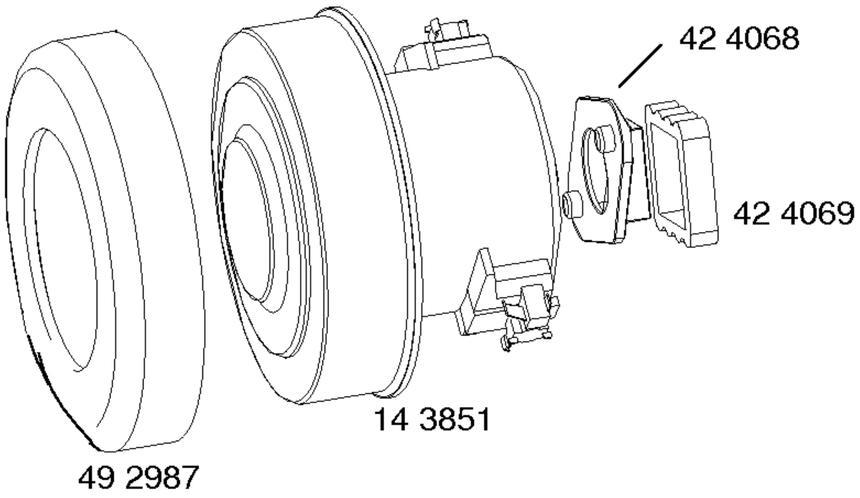

Copyright © (2012) by Ufesa / 205502

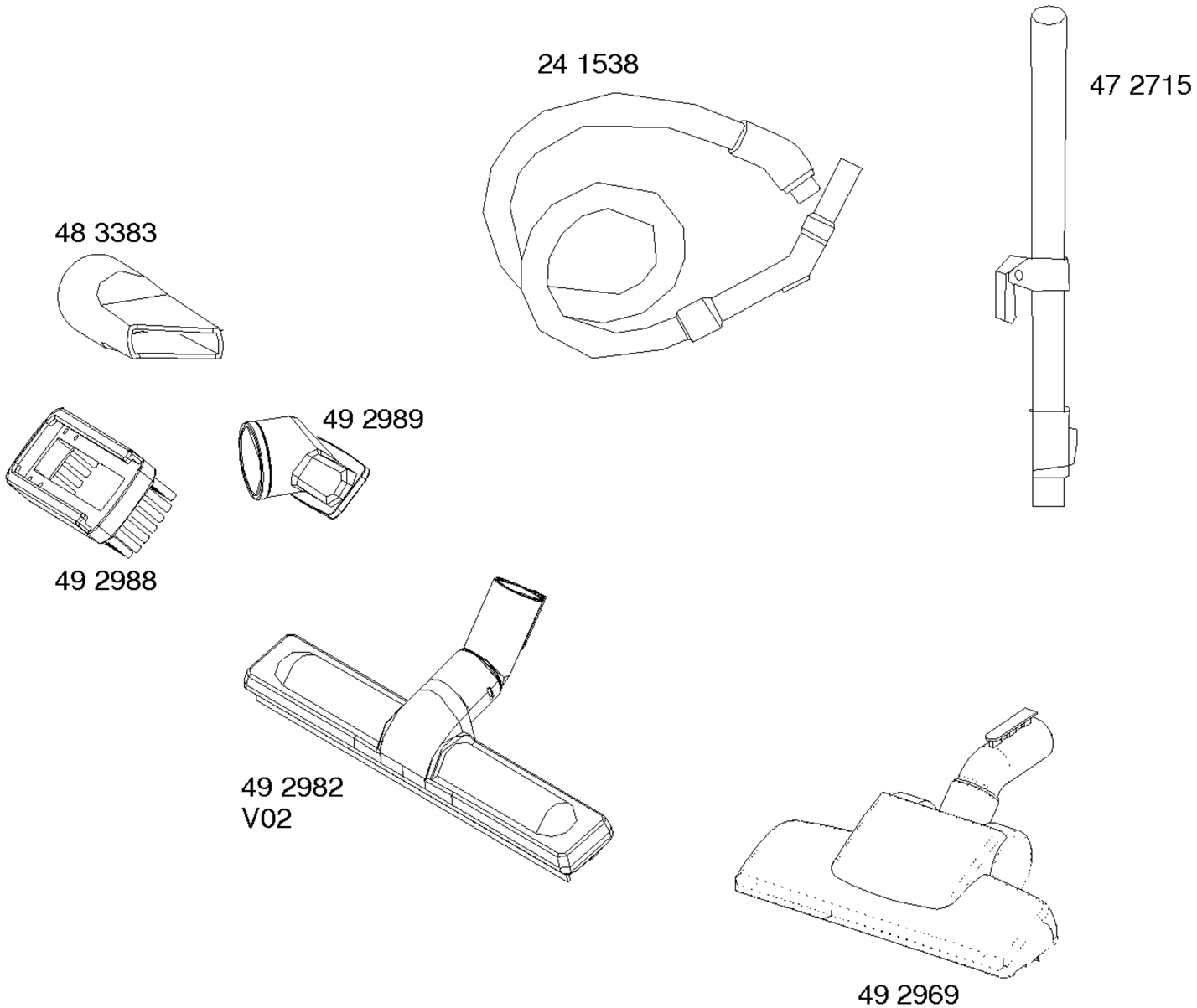

Copyright © (2012) by Ufesa / 205502