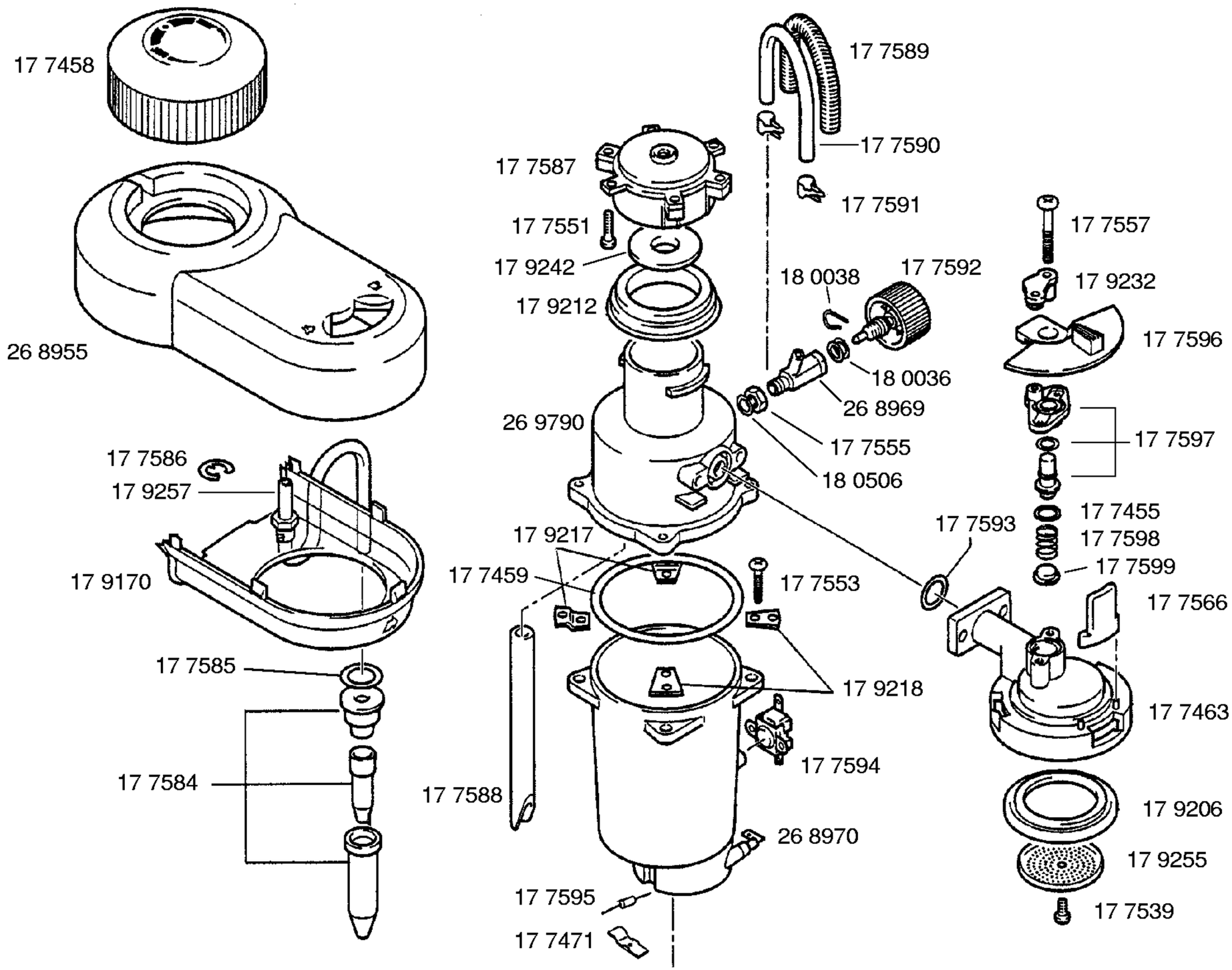

Copyright © (2007) by ufesa / 500990

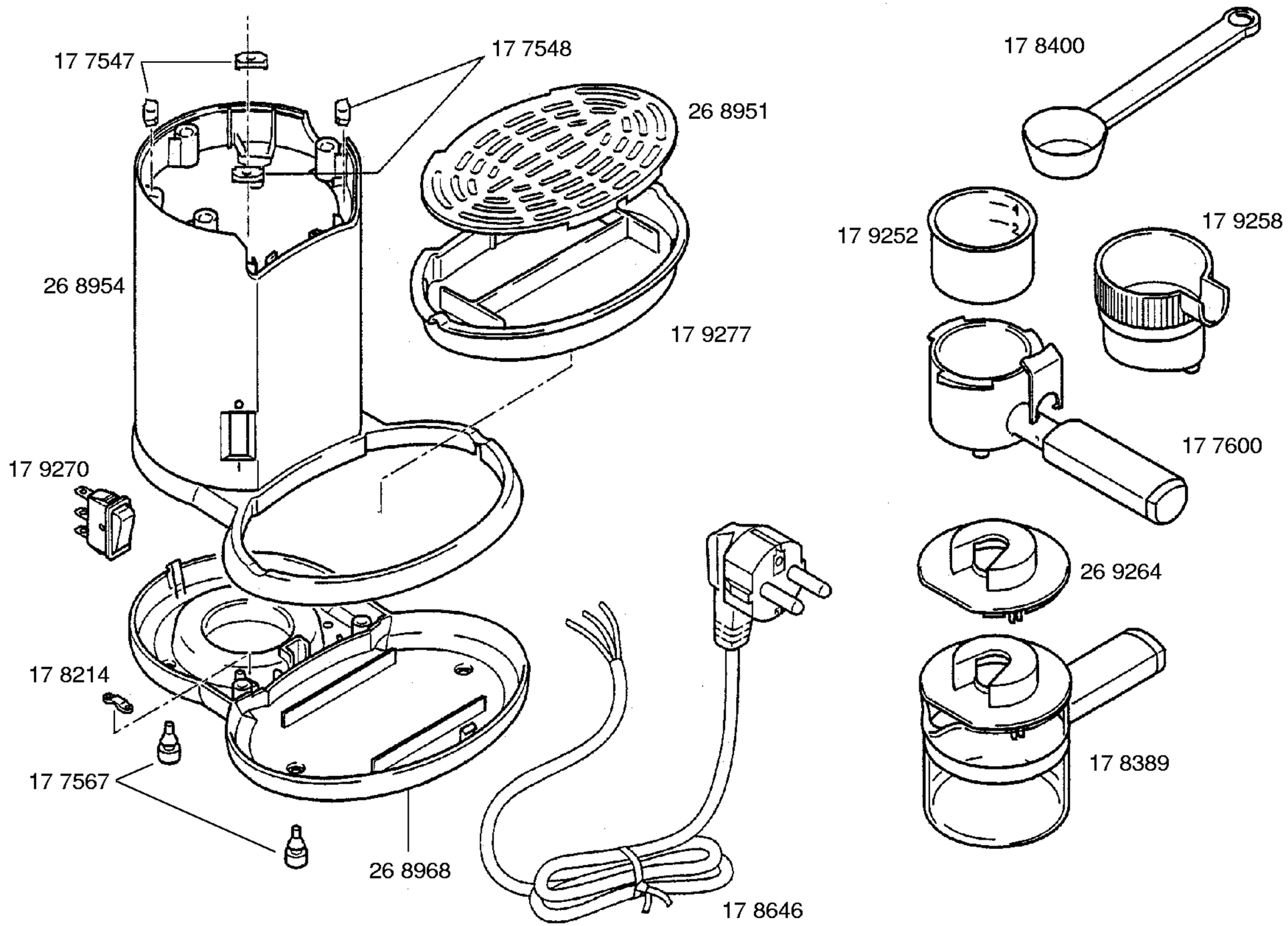

Copyright © (2007) by ufesa / 500990