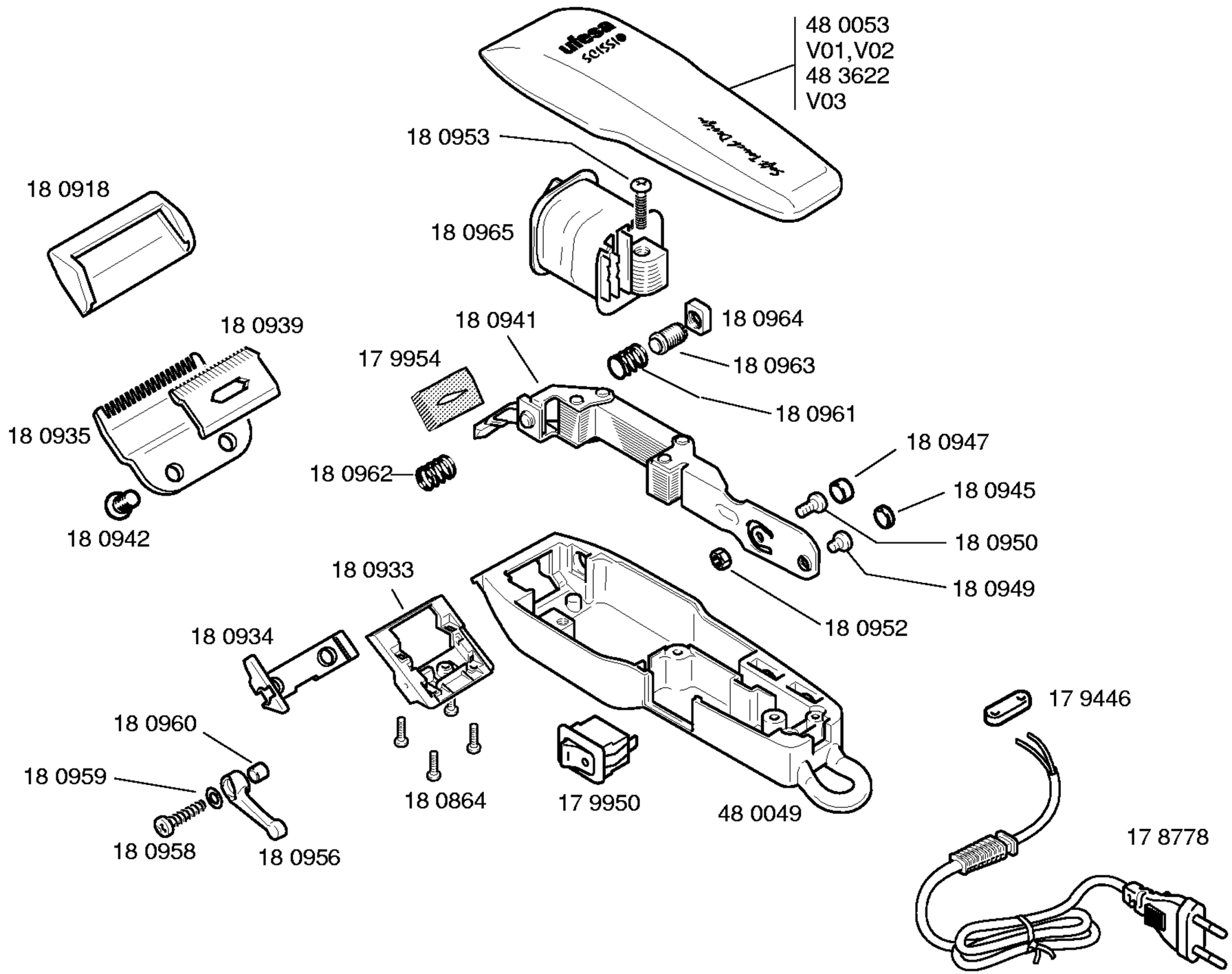

Copyright © (2009) by Ufesa / SERDE_PLAZ

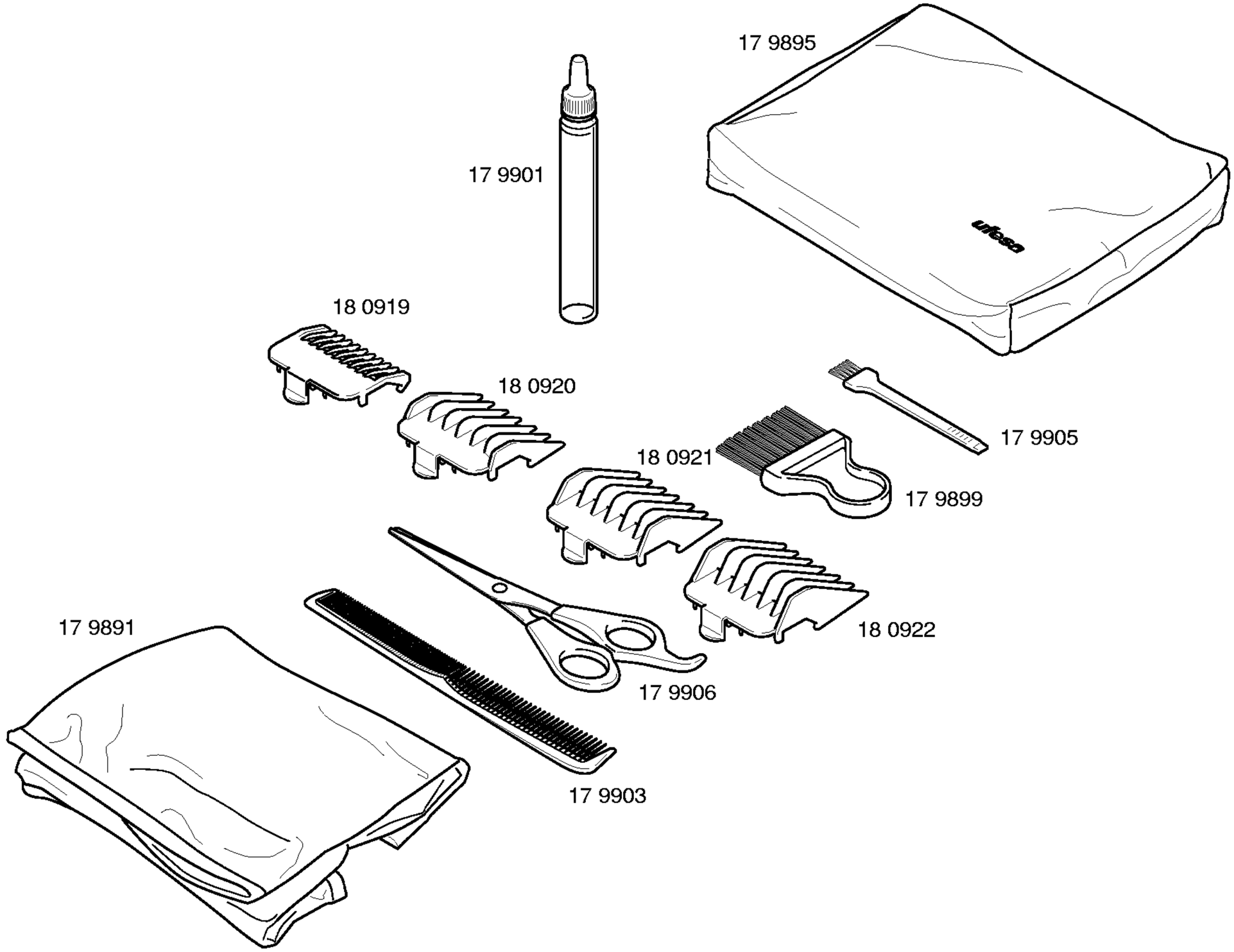

Copyright © (2009) by Ufesa / SERDE_PLAZ