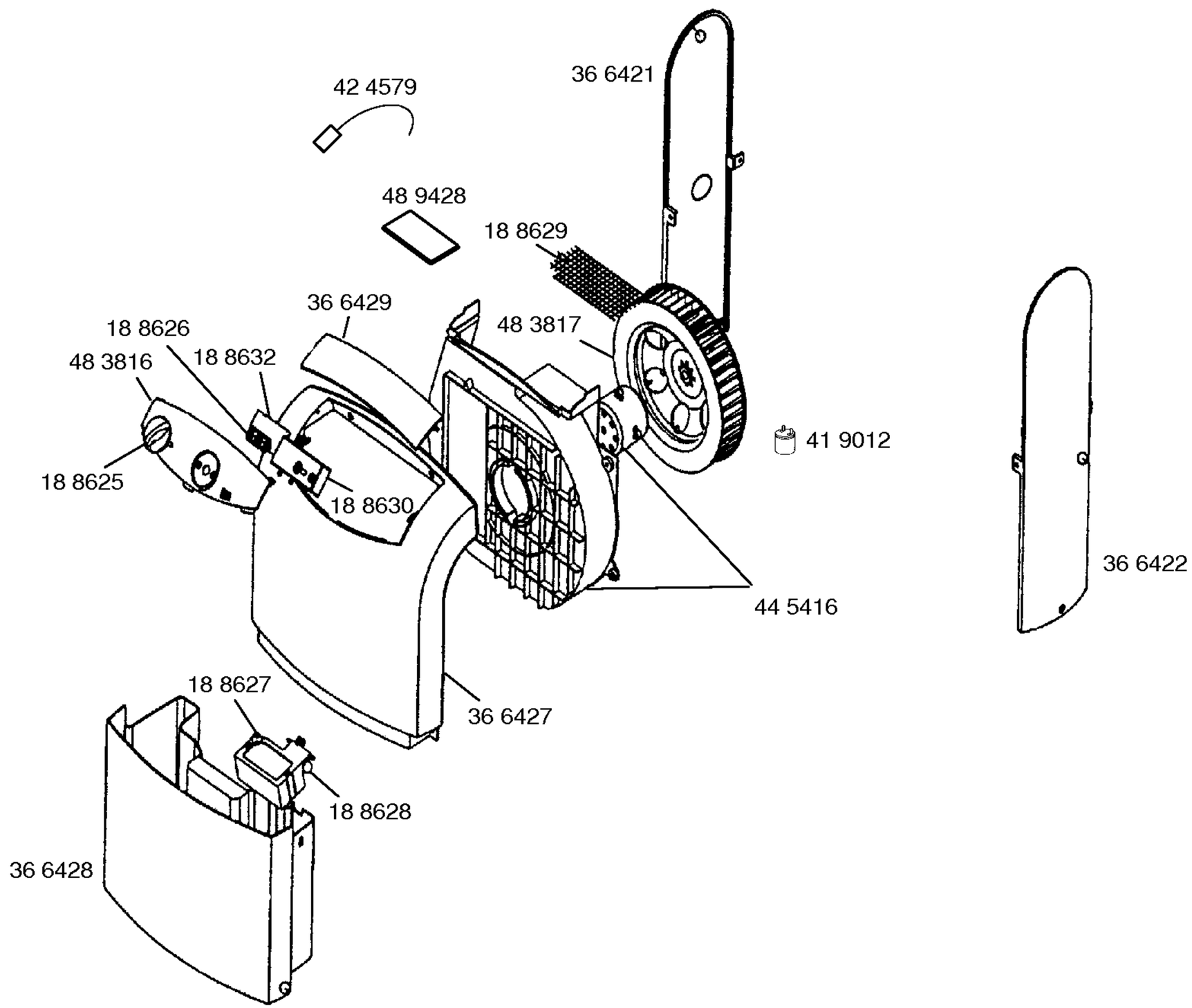

Copyright © (2012) by Ufesa / 205502

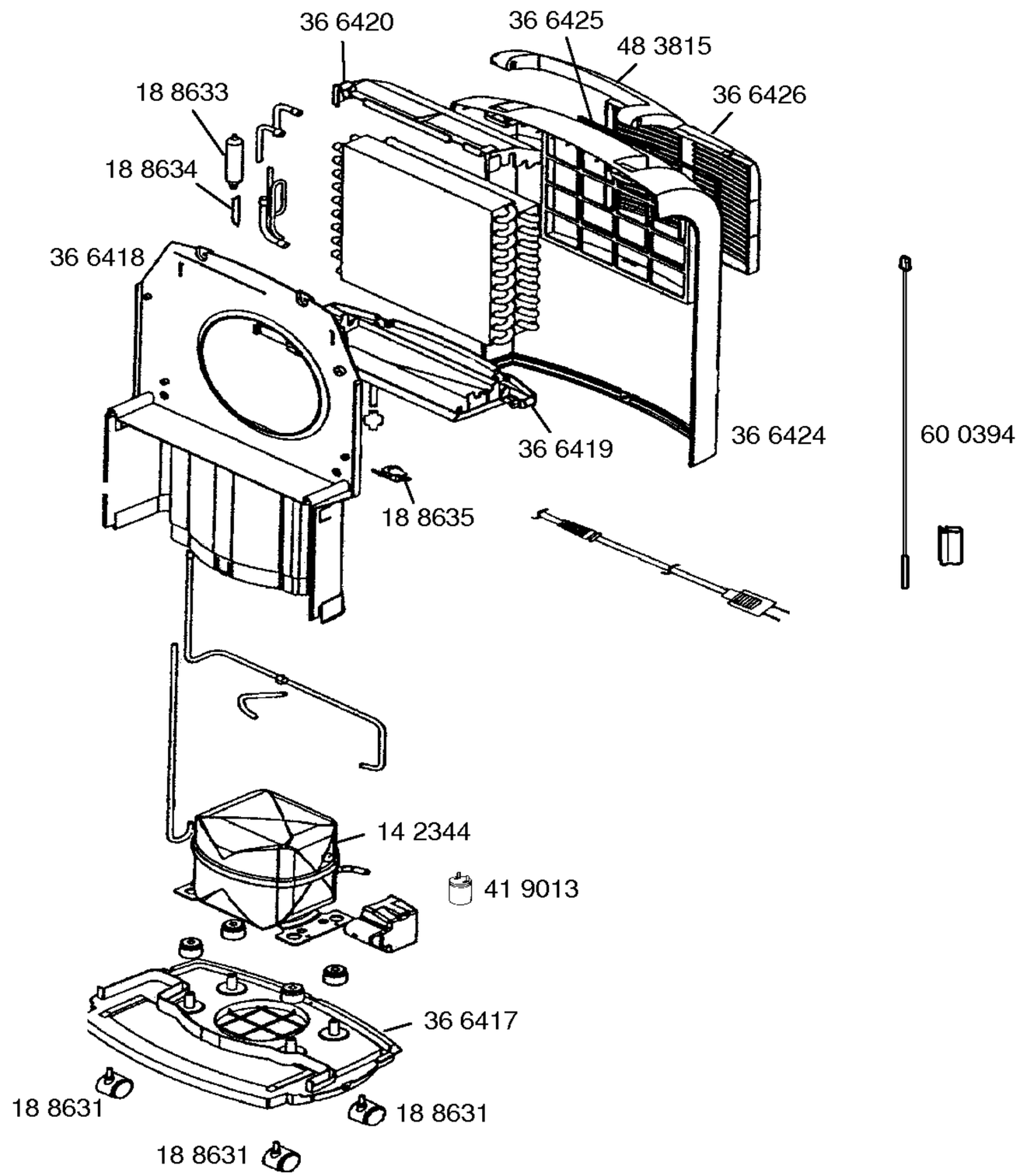

Copyright © (2012) by Ufesa / 205502