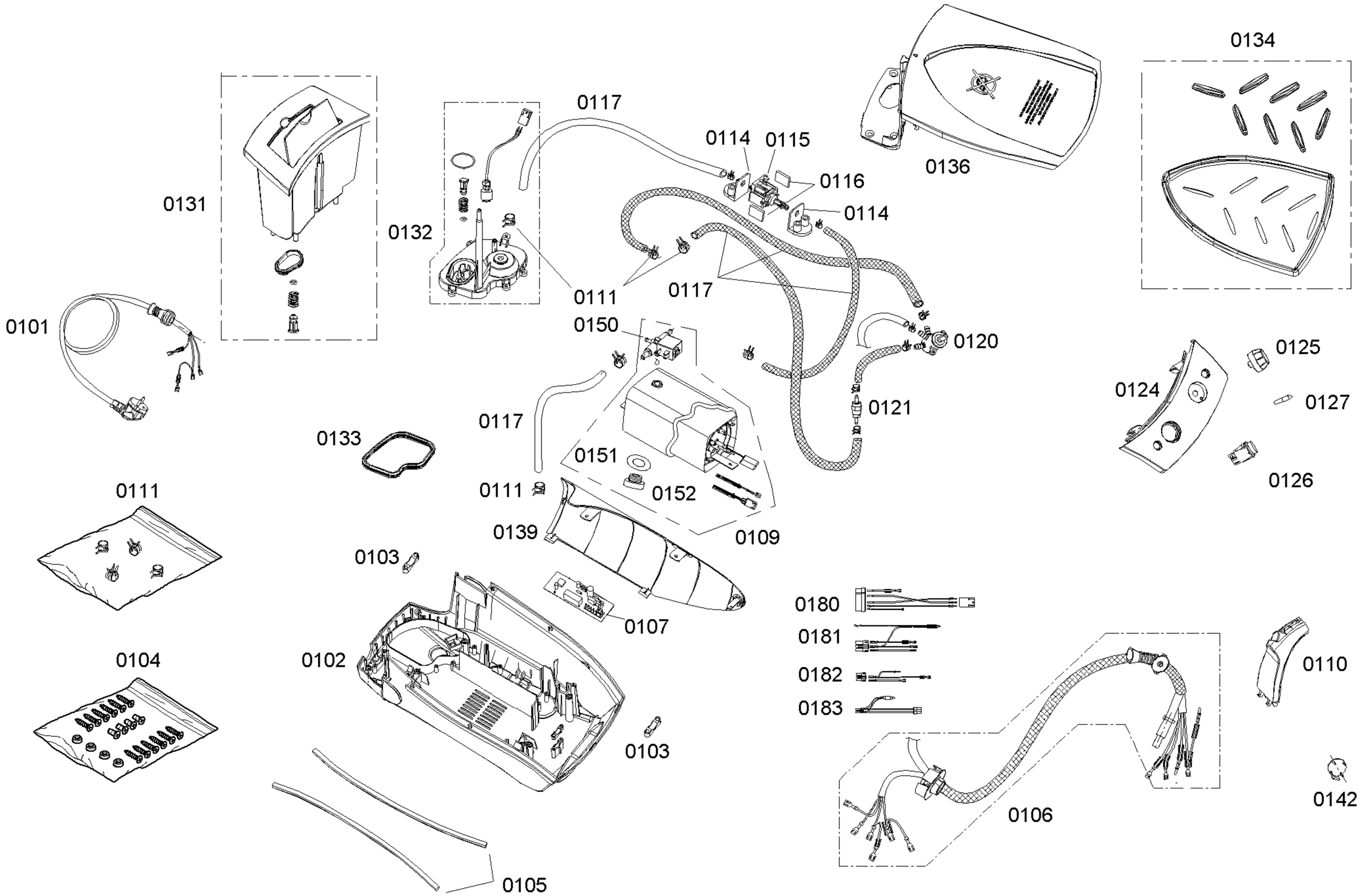

Copyright © (2013) by Ufesa / 205502

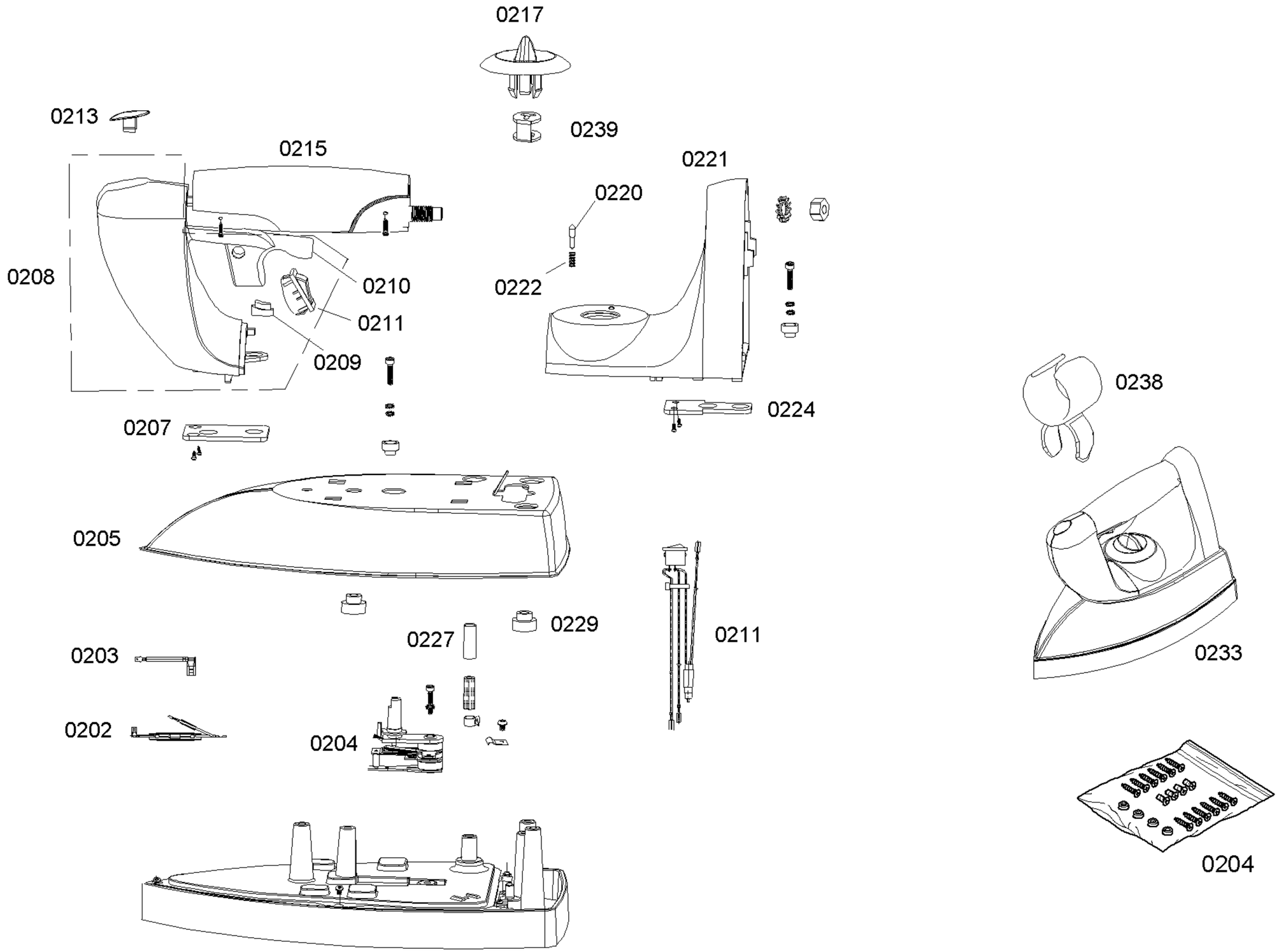

Copyright © (2013) by Ufesa / 205502