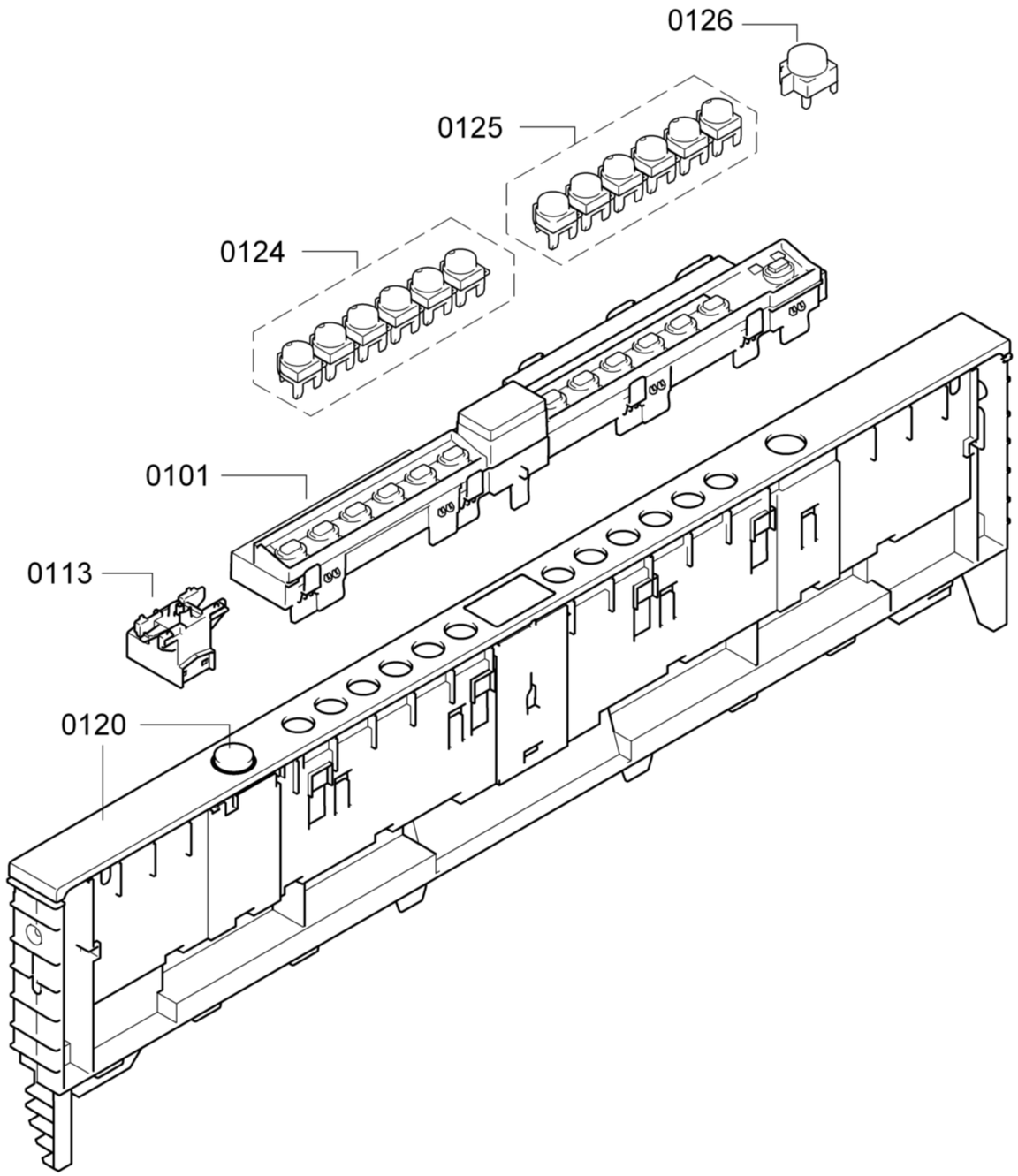

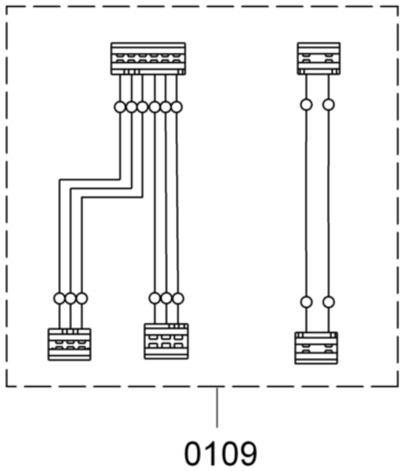

Copyright © (2015) by Siemens / SERDEEX_ROSENBER

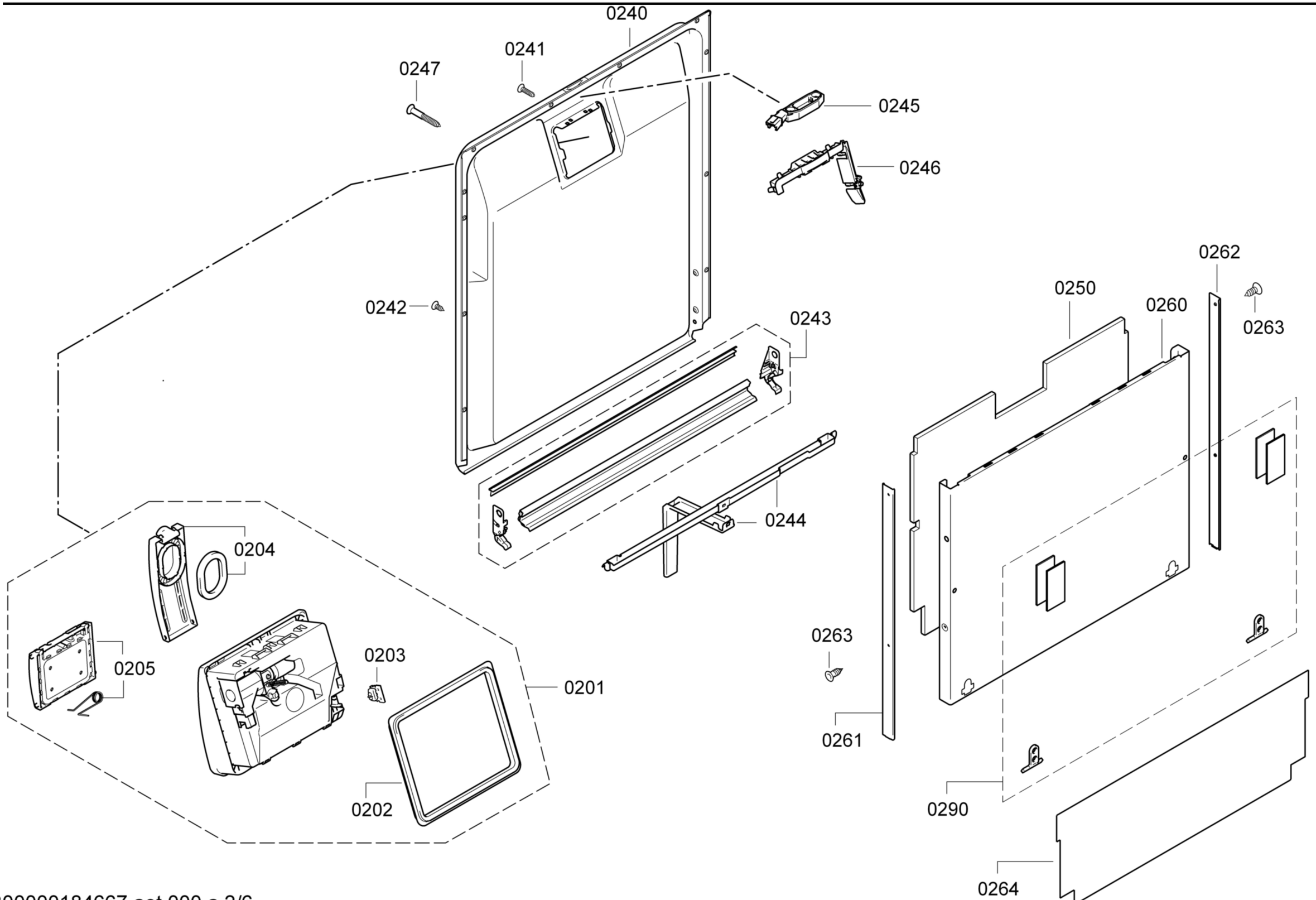

58300000184667 aet 000 a 2/6

Copyright © (2015) by Siemens / SERDEEX_ROSENBER

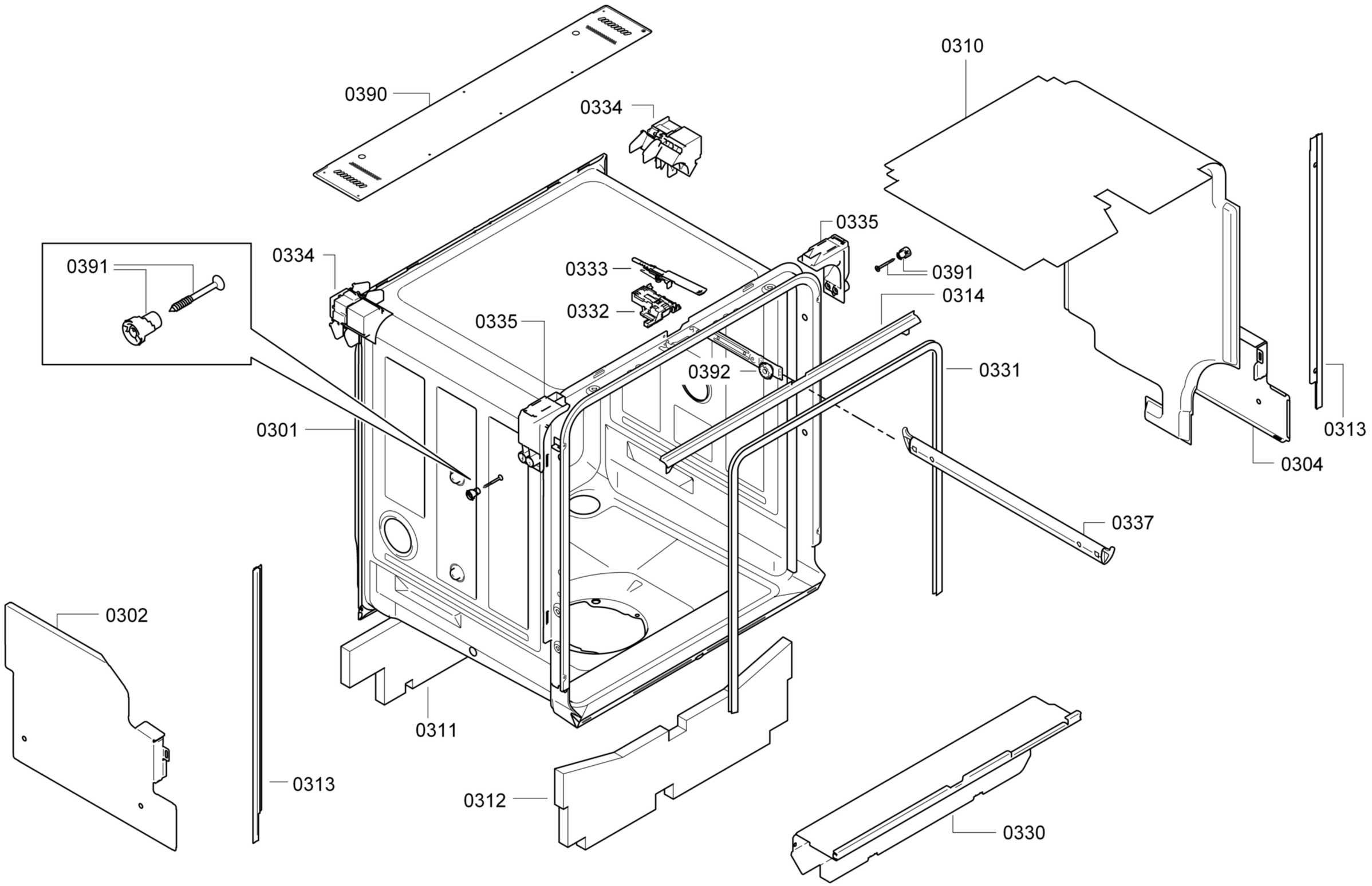

Copyright © (2015) by Siemens / SERDEEX_ROSENBER

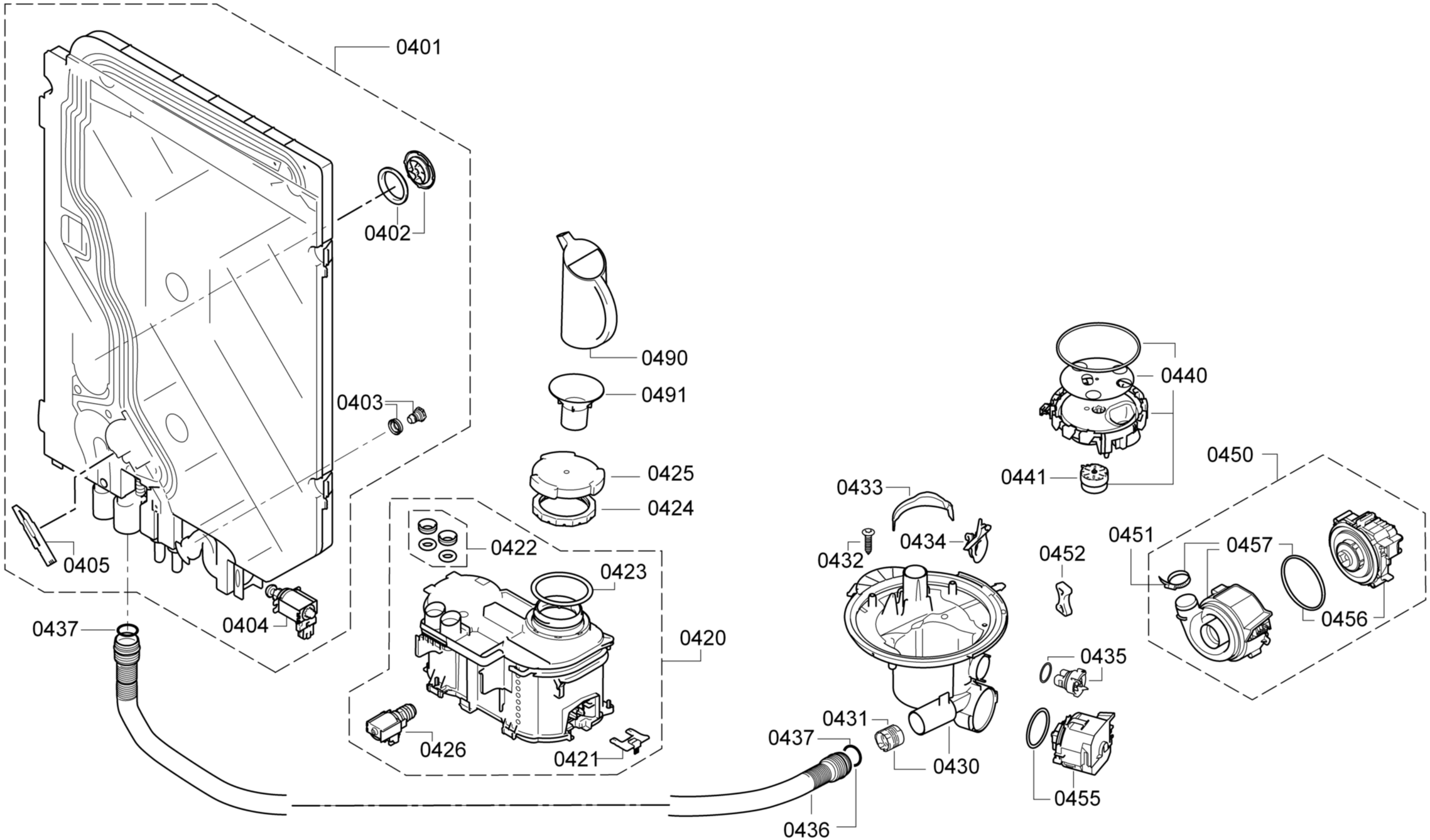

Copyright © (2015) by Siemens / SERDEEX_ROSENBER

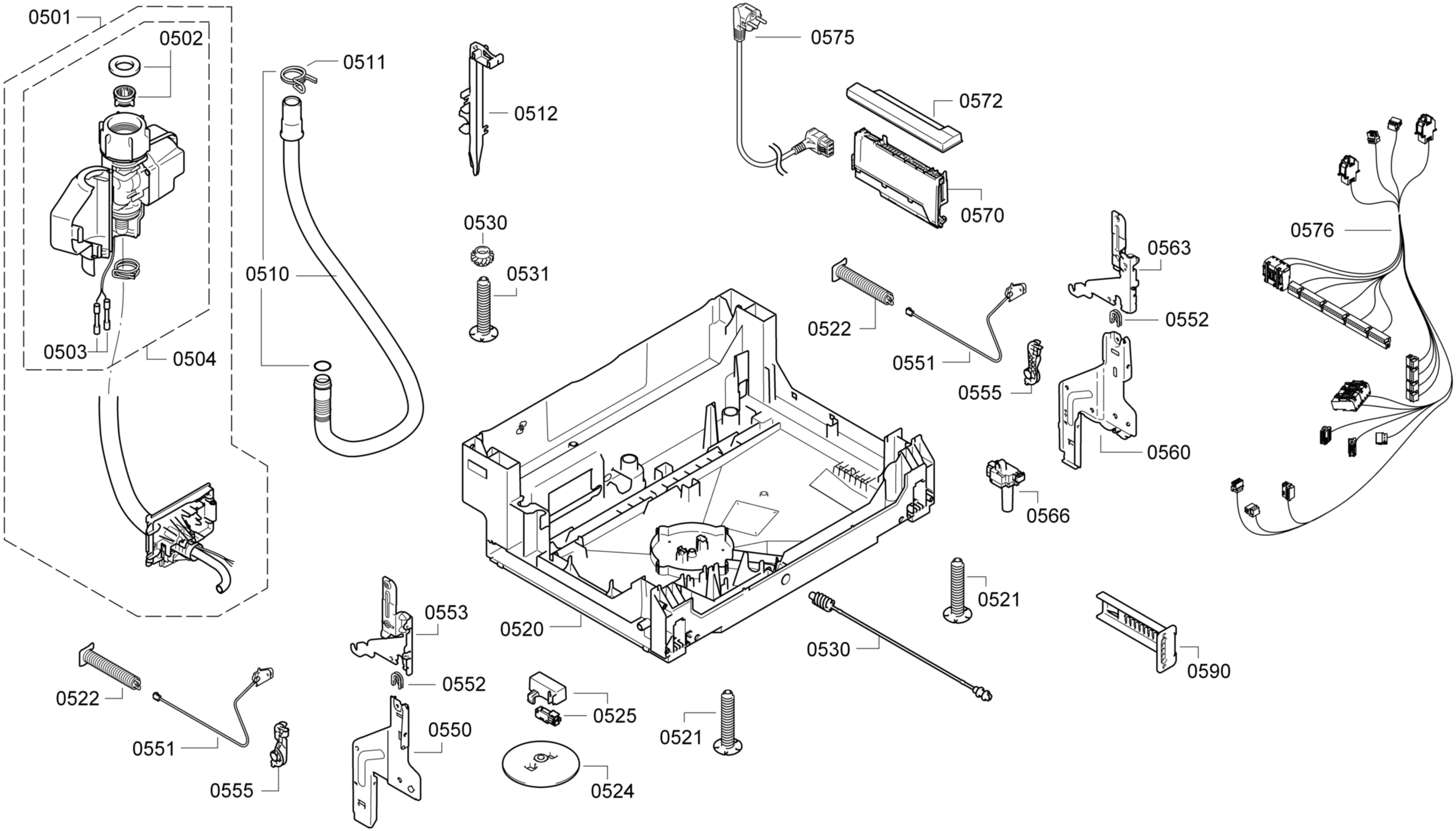

Copyright © (2015) by Siemens / SERDEEX_ROSENBER

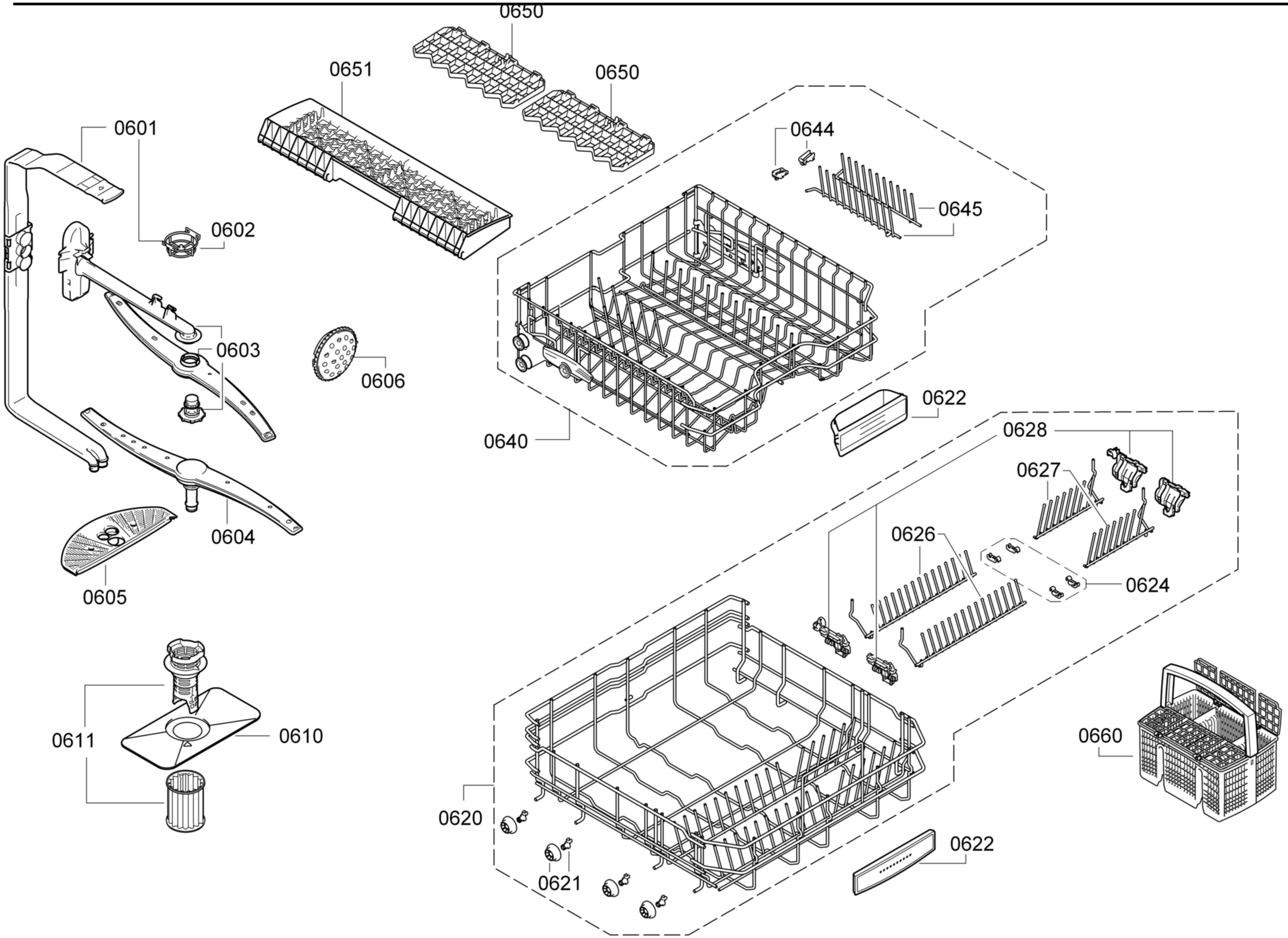

Copyright © (2015) by Siemens / SERDEEX_ROSENBER